DINLI 700 cc Service Manual

All rights reserved. No parts of this publication may be reproduced, stored in a retrieval system, or transmitted in any form or by any means, electronic mechanical photocopying, recording or otherwise, without the prior written permission of **Dinli Metal Industrial Co., Ltd.**.

No liability can be accepted for any inaccuracies or omissions in this publication, although every possible care has been taken to make it as complete and accurate as possible.

The right is reserved to make changes at any time without prior notice and without incurring an obligation to make such changes to products manufactured previously. See your dealer for the latest information on product improvements incorporated after this publication.

All information contained in this publication is based on the latest product information available at the time of publication.

Illustrations and photographs in this publication are intended for reference use only and may not depict actual model component parts.

○,cCOPYRIGHT DINLI METAL INDUSTRIAL CO., LTD. 2008

Foreword

This manual is designed primarily for use by trained mechanics in a properly equipped shop. A basic knowledge of mechanics, the proper use of tools, and workshop procedures must be understood in order to carry out maintenance and repair satisfactorily. In order to perform the work efficiently and to avoid costly mistakes, read the text thoroughly to familiarize yourself with the procedures before starting work, and then do the work carefully in a clean area. Precision measurements can only be made if the proper instruments are used, and the use of substitute tools may adversely affect safe operation.

For the duration of the warranty period, we recommend that all repairs and scheduled maintenance be performed in accordance with this service manual. Any owner maintenance or repair procedure not performed in accordance with this manual may void the warranty.

To get the longest life out of your vehicle:

- Follow the Periodic Maintenance Chart in the Service Manual.
- Be alert for problems and non-scheduled maintenance.
- Use proper tools and genuine DINLI vehicle parts. Genuine parts provided as spare parts are listed in the Parts Catalog.
- Follow the procedures in this manual carefully. Don't take shortcuts.
- Remember to keep complete records of maintenance and repair with dates and any replaced parts.

How to Use This Manual

In preparing this manual, we divided the product into its major systems. These systems became the manual's chapters. All information for a particular system from adjustment through disassembly and inspection is located in a single chapter.

The Quick Reference Guide shows you all of the product's system and assists in location of their chapters. Each chapter in turn has its own comprehensive Table of Contents.

The Periodic Maintenance Chart is located in the General Information chapter. The chart gives a time schedule for required maintenance operations.

If you want spark plug information, for example, go to the Periodic Maintenance Chart first. The chart tells you how frequently to clean and gap the plug. Next, use the Quick Reference Guide to locate the Electrical System chapter. Then, use the Table of Contents on the first page of the chapter to find the Spark Plug section.

Whenever you see these WARNING and CAUTION symbols, heed their instructions! Always follow safe operating and maintenance practices.

⚠ WARNING
This warning symbol identifies special instructions or procedures, which if not correctly followed, could result in personal injury, or loss of life.

CAUTION
This caution symbol identifies special instructions or procedures, which if not strictly observed, could result in damage to or destruction of equipment.

This manual contains four more symbols (in addition to WARNING and CAUTION), which will help you distinguish different types of information.

NOTE

○ This note symbol indicates points of particular interest for more efficient and convenient operation.

● Indicates a procedural step or work to be done.

○ Indicates a procedural sub-step or how to do the work of the procedural step it follows. It also precedes the text of a NOTE.

□ Indicates a conditional step or what action to take based on the results of the test or inspection in the procedural step or sub-step it follows.

CHAPTER INDEX

CHAPTER 1	GENERAL
CHAPTER 2	WHEELS/TIRES
CHAPTER 3	BRAKE
CHAPTER 4	SUSPENSION
CHAPTER 5	FRAME
CHAPTER 6	ENGINE
CHAPTER 7	ELECTRICAL
CHAPTER 8	APPENDIX

GENERAL INFORMATION

Table of Contents

Before Servicing----------1-2
Model Identifications---------- 1-5
General Specifications----------1-6
Periodic Maintenance Chart----------1-8

Before Servicing

Before starting to perform an inspection service or carry out a disassembly and reassembly operation on a quad, read the precautions given below. To facilitate actual operations, notes, illustrations, photographs, cautions, and detailed descriptions have been included in each chapter wherever necessary. This section explains the items that require particular attention during the removal and reinstallation or disassembly and reassembly of general parts.

Especially note the following:

(1) Dirt

Before removal and disassembly, clean the quad. Any dirt entering the engine will shorten the life of the quad. For the same reason, before installing a new part, clean off any dust or metal fillings.

(2) Battery Ground

Disconnect the ground (-) wire from the battery before performing any disassembly operations on the quad. This prevents the engine from accidentally turning over while work is being carried out, sparks from being generated while disconnecting the wires from electrical parts, as well as damage to the electrical parts themselves. For reinstallation, first connect the positive wire to the positive (+) terminal of the battery.

(3) Installation, Assembly

Generally, installation or assembly is the reverse of removal or disassembly. However, if installation or assembly sequence is given in this Service Manual, follow it. Note parts locations and cable, wire, and hose routing during removal or disassembly so they can be installed or assembled in the same way. It is preferable to mark and record the locations and routing whenever possible.

(4) Tightening Sequence

When installing bolts, nuts, or screws for which a tightening sequence is given in this Service Manual, make sure to follow the sequence. When installing a part with several bolts, nuts, or screws, start them all in their holes and tighten them to a snug fit, thus ensuring that the part has been installed in its proper location. Then, tighten them to the specified torque in the tightening sequence and method indicated. If tightening sequence instructions are not given, tighten them evenly in a cross pattern. Conversely, to remove a pat, first loosen all the bolts, nuts, or screws that are retaining the part a 1/4-turn before removing them.

(5) Torque

When torque values are given in this Service Manual, use them. Either too little or too much torque may lead to serious damage. Use a good quality, reliable torque wrench.

(6) Force

Common sense should dictate how much force is necessary in assembly and disassembly. If a part

seems especially difficult to remove or install, stop and examine what may be causing the problem. Whenever tapping is necessary, tap lightly using a wooden or plastic-faced mallet. Use an impact driver for screws (particularly for the removing screws held by non-permanent locking agent) in order to avoid damaging the screw heads.

(7) Edges

Watch for sharp edges, as they could cause injury through careless handing, especially during major engine disassembly and assembly. Use a clean piece of thick cloth when lifting the engine or turning it over.

(8) High-Flash Point Solvent

A high-Flash point solvent is recommended to reduce fire danger. A commercial solvent commonly available in North America is standard solvent (generic name). Always follow manufacturer and container directions regarding the use of any solvent.

(9) Gasket, O-Ring

Replace a gasket or an O-ring with a new part when disassembling. Remove any foreign matter from the mating surface of the gasket or O-ring to ensure a perfectly smooth surface to prevent oil or compression leaks.

(10) Liquid Gasket, Locking Agent

Clean and prepare surfaces where liquid gasket or non-permanent locking agent will be used. Apply them sparingly. Excessive amount may block engine oil passages and cause serious damage.

(11) Press

When using a press or driver to install a part such as a wheel bearing, apply a small amount of oil to the area where the two parts come in contact to ensure a smooth fit.

(12) Ball Bearing and Needle Bearing

Do not remove a ball bearing or a needle bearing unless it is absolutely necessary. Replace any ball or needle bearings that were removed with new ones. Install bearings with the manufacturer and size marks facing out, applying pressure evenly with a suitable driver. Apply force only to the end of the race that contacts the press fit portion, and press it evenly over the base component.

(13) Oil Seal and Grease Seal

Replace any oil or grease seals that were removed with new ones, as removal generally damages seals. Oil or grease seals should be pressed into place using a suitable driver, applying a force uniformly to the end of seal until the face of the seal is even with the end of the hole, unless instructed otherwise. When pressing in an oil or grease seal, which has manufacturer's marks, press it in with the marks facing out.

(14) Cir-clip, Retaining Ring, and Cotter Pin

When installing cir-clips and retaining rings, take care to compress or expand them only enough to install them and no more. Install the cir-clip with its chamfered side facing load side as well. Replace

any cir-clips, retaining rings, and cotter pins with new ones, as removal weakens and deforms them, they could become detached while the quad is driven, leading to a major problem.

(15) Lubrication

Engine wear is generally at its maximum while the engine is warming up and before all the sliding surfaces have an adequate lubrication film. During assembly, make sure to apply oil to any sliding surface or bearing that has been cleaned. Old grease or dirty oil could have lost its lubrication quality and may contain forging particles that act as abrasives; therefore, make sure to wipe it off and apply fresh grease or oil. Some oils and greases in particular should be used only in certain applications and may be harmful if used in an application for which they are not intended.

(16) Direction of Engine Rotation

To rotate the crankshaft manually, make sure to do so in the direction of positive rotation Positive rotation is counterclockwise as viewed from the left side of the engine. To carry out proper adjustment, it is furthermore necessary to rotate the engine in the direction of positive rotation as well.

(17) Replacement Parts

When there is a replacement instruction, replace these parts with new ones every time they are removed. Always replace these parts with new ones every time they are removed. Although the previously mentioned gasket, O-ring, ball bearing, needle bearing, grease seal, oil seal, cir-clip, and cotter pin have not been so designated in their respective text, they are replacement parts.

(18) Electrical Wires

All the electrical wires are either one-color or two-color. A two-color wire is identified first by the primary color and then the stripe color. For example, a yellow wire with thin red stripes is referred to as a "yellow/red" wire; it would be a "red/yellow" wire if the colors were reversed. Unless instructed otherwise, electrical wires must be connected to wires of the same color.

(19) Inspection

When parts have been disassembled, visually inspect these parts for the following conditions or other damage. If there is any doubt as to the condition of them, replace them with new ones.

Abrasion	Crack	Hardening	Warp
Bent	Dent	Scratch	Wear
Color change	Deterioration		Seizure

(20) Specifications

Specification terms are defined as follows:

"Standards" show dimensions or performances which brand-new parts or systems have.

"Service Limits" indicate the usable limits. If the measurement shows excessive wear or deteriorated performance, replace the damaged parts.

Model Identification

Engine serial number

Vehicle identification number

ENGINE SERIAL NUMBER (Ex. 15M18XXXXX)

VEHICLE IDENTIFICATION (ex. RFWAK85CX6Txxxxxx)

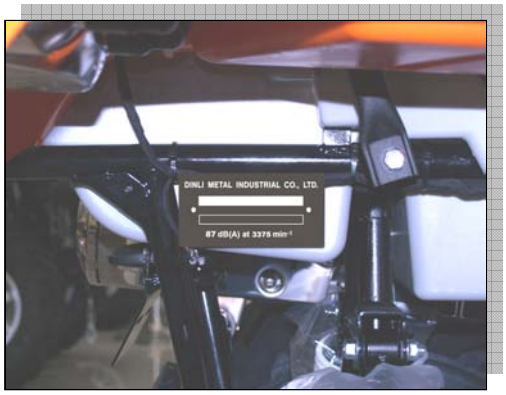

Whenever corresponding with DINLI about a particular issue, the engine number and serial number are important for vehicle identification.

General Specification

NOTE:

Specifications subject to change without notice.

Model	DL702
Engine	4-stroke, DOHC
Bore and stroke	102mm x 85 mm
Compression ratio	10.0:1
Displacement	694.6 cc
Coolant system	Liquid cooled
Coolant	1:2 water/anti-freeze [ethylene glycol(containing corrosion inhibitors for aluminum engines and radiators)], Quantity = 3 liter
Starting system	Electric
Carburetor	Mikuni BSR42
Transmission	L-H-N-R-P
Final drive	2WD/4WD/4WD LOCK ; Shaft
Clutch type	Automatic CVT; wet drum
Engine idle speed	1300 ± 100 rpm
Spark plug, standard	CR6E (NGK)
Spark plug gap	0.8~0.9 mm
Lubrication system	Forced pressure and wet sump
Lubricant	4-cycle motorcycle engine oil 10W-40, Grade SF or higher
Ignition system	CDI
Gasoline	Unleaded, Octane 95 or higher
Alternator Output	DC 12V-18A @ 3000rpm
Cooling Device Operating Temperature	85℃

Note: Permissible operating temperature: -10□~45□。

CHASSIS

Frame	Steel
Overall length	2208 mm
Overall width	1129 mm
Overall height	1120 mm
Seat height	916 mm
Wheel base	1305 mm
Front tire	25 x 8 – 12
Rear tire	25 x 10 – 12
Recommended cold tire pressure (front/rear)	35kpa/ 30kpa (5.0psi/ 4.4psi)
Turning radius	6.5m
Fuse	5A, 10A, 15A, 30A
Loading limit (Incl. rider, cargo, etc….)	250kg
Voltage	12V
Battery	GS, GTX20L-BS
Ground clearance, unloaded	295 mm
Water crossing maximum depth	520 mm
Front suspension travel	170mm
Rear suspension travel	170mm
Dry weight (approx KGs)	298
Fuel tank capacity	20L
Throttle lever free play	3~8 mm
Air filter	Foam
Brake fluid	DOT 4
Brake pad thickness (MIN)	3.5 mm
Brake disc thickness (MIN)	4 mm
Drive system	Shaft

Periodic Maintenance Chart

Perform a Pre-Ride inspection before every ride and at schedule maintenance periods.

C=Clean R=Replace L=Lubricate I=Inspect, Verify, Clean, Adjust, Lubricate, Replace if necessary		Regular Maintenance Internal					
Items \ Interval		Break in	Initial week	Every 1 month	Every 3 month	Every 6 month	Note
		First hour	After 10 hours	Every 10	Every 50	Every 100	
		0	Initial 200	Every 200	Every 1000	Every 2000	
	WARNING LABELS (condition, readable) Day/Months	I	I	I	I	I	I
	AIR FILTER Hours km	I			C	C	★
	FRAME (mainframe, subframe)	I	I	I			
	FUEL LINE	I			I	I	Replace every four years
▲	THROTTLE OPERATION	I	I	I	I	I	
	SPARK PLUG					I	Replace every 6000 km
○	IDLE SPEED		I		I		
	ENGINE OIL	I	R			R	
▲	ENGINE OIL FILTER (s)	C	R			R	
	DIFFERENTIAL GEAR OIL					I	Replace every two years
	FINAL GEAR OIL					I	Replace every year
	COOLANT	I			I	I	Replace every two years
	SWITCHES (engine, stop, start, tether, ignition)	I			I		★
	BRAKE FLUID	I			I	I	Replace every two years
▲	BRAKE SYSTEM (cables, discs, pads, hosed, etc.)	I	I	I	I	I	★
	BRAKE DISCS	I	I		I	I	Replace every 10000 km
▲	LIGHTING (headlight, tail light, turning lights)	I		I			
	BATTERY (terminals)			I,C			
▲	EXHAUST (spark arrester)					C	
	SUSPENSION	I	I			I	
	NUTS, BOLTS AND FASTENERS		I	I	I	I	
▲	WHEELS/TIRES (pressure, condition, wear)	I			I	I	
▲	Steering assembly (fasteners, operation)	I		I	I	I	★
	General Lubrication	L			L	L	

▲DINLI dealer service suggested servicing owners should have the proper tools, service data, and be mechanically qualified.

○Operational safety involved. The service should be performed by a DINLI dealer.

★Service more frequently if operation in dusty, sandy or snowy area or conditions.

Wheels/Tires

Table of Contents

Specifications----------2-2
Wheel Alignment----------2-3
Steering Centering Inspection----------2-3
Steering Centering Adjustment----------2-3
Toe-in Inspection----------2-4
Toe-in Adjustment----------2-4
Wheels (Rims)----------2-5
Wheel Removal----------2-5
Wheel Installation----------2-5
Wheel (Rim) Inspection----------2-5
Wheel (Rim) Replacement----------2-6
Tires----------2-6
Tires Removal----------2-6
Tires Installation----------2-7
Tires Inspection----------2-8
Front Hub----------2-8
Front Hub Removal----------2-8
Front Hub Installation----------2-9
Front Hub Disassembly/Assembly----------2-9
Rear Hub----------2-9
Real Hub Installation----------2-9
Rear Hub Disassembly/Assembly----------2-9

Specifications

Item		Standard
Wheel Alignment: Toe-in		11~40 mm
Tires:		
Standard tire:	Front	AT 25×8-12
		MAXXIS M915, Tubeless
	Rear	AT 25×10-12
		MAXXIS M916, Tubeless
Tire air pressure (when cold):		
	Front	35 kPa (0.35 kgf/cm^2, 5.0 psi)
	Rear	30 kPa (0.31 kgf/cm^2, 4.4 psi)
Vehicle Maximum load-capacity		250 KG

Wheel Alignment

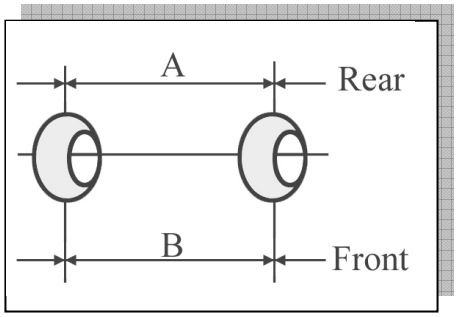

Toe-in is the amount that the front wheels are closer together in front than at the rear at the axle height. When there is toe-in, the distance A (Rear) is the greater than B (Front) as shown.

The purpose of toe-in is to prevent the front wheels from getting out of parallel at any time, and to prevent any slipping or scuffing action between the tires and the ground, if toe-in is incorrect, the front wheels will be dragged along the ground, scuffing and wearing the tread knobs. Measure the distance between vehicle center and each wheel. This will tell you which tie rod needs adjusting.

Caster and camber are secured and required no adjustment.

A (Rear)-B (Front) = Amount of Toe-in

(Distance A and B are measured at axle height)

CAUTION
During the tie rod adjustment, it is very important that the precautions be taken when tightening tie rod end jam nuts.

Steering Centering Inspection

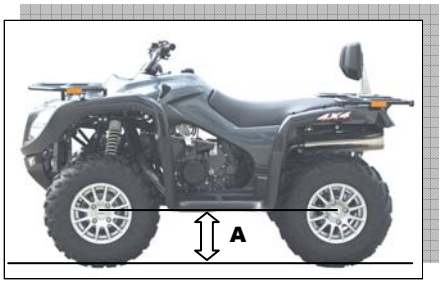

- Test ride the vehicle.

□If the handlebar is straight when the vehicle is traveling in a straight line, go on to the Toe-in Inspection procedure.

□Otherwise, go on to the Steering Centering Adjustment procedure.

Steering Centering Adjustment

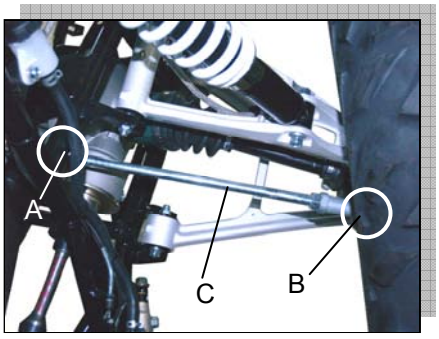

- Support the vehicle so that the front wheels are off the ground and the front axles about the same height as the rear axle.

○ Hold a straight edge [A] against the rear wheel rim on one side at axle height.

- With the handlebar straight ahead, loosen the locknuts [A] [B] and Turn the tie-rod adjusting sleeve [C] until the front wheel on that side is parallel to the straightedge.

NOTE
The locknut [A] on the tie-rod has left-hand threads. Turn the wrench clockwise for loosening.

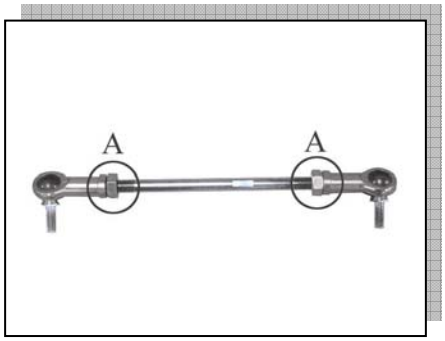

CAUTION
Adjust the tie-rod so that the visible thread length [A] is even on both ends of the tie-rod, or the threads could be damaged.

- Repeat the straight edge procedure on the other side of the vehicle, now the front wheels are parallel to each other and to the center line of the vehicle.
- Go on to the Toe-in Inspection procedure.

Toe-in Inspection

- Support the vehicle on a stand or the jack so that the front wheels are off the ground.
- Apply a heavy coat of the chalk near the center of the front tires.
- Using a needle nose scriber, mark a thin mark near the center of the chalk coating while turning the wheel.
- Keeping the front wheels off the ground, set the handlebar straight ahead.
- At the level of the axle height, measure the distance between the scribed lines for both front and rear of the front tires.
- Subtract the measurement of the front from the measurement of the rear to get the toe-in.

□If the toe-in is not in the specified range, go on to the Toe-in adjustment procedure. Toe-in of Front Wheels Standard:

Standard	0~2 mm

Toe-in Adjustment

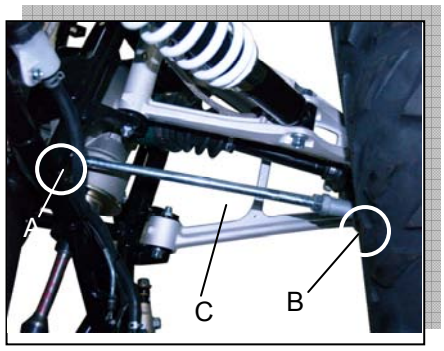

- Loosen the locknuts [A] [B] and turn the adjusting sleeves [C] the same number of turns on both sides to achieve the specified toe-in.

NOTE
○ The nut [A] on the tie-rod has left-hand threads. Turn the nut clockwise for loosening. ○ The toe-in will be near the specified value, if the tie-rod length [D] is 385 mm on each tie-rod.

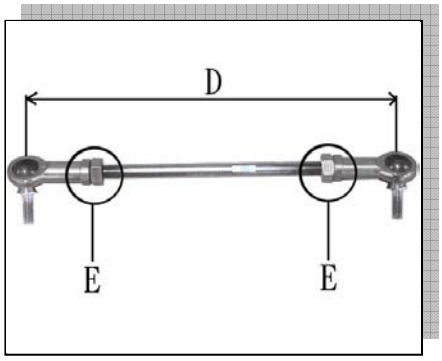

CAUTION:
Adjust the tie-rod length so that the visible thread length [E] is even on both ends of the tie-rod. Uneven length could cause tie-rod damage.

- Check the toe-in.
- Tighten:

Torque - Tie-Rod Adjusting Sleeve Locknuts: 33 N-m (3.4 kgf-m, 45 ft-lb)

- Test ride the vehicle.

Wheels (Rims)

Wheel Removal

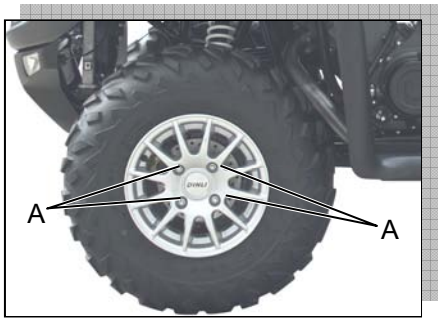

- Support the vehicle on a stand or the jack so that the wheels are off the ground.
- Loosen the wheel nuts [A]
- Take off the wheel nuts and remove the wheel.

Wheel Installation

- Check the tire rotation mark [A] on the tire, and install the wheel accordingly.

NOTE
○ The direction of the tire rotation is shown by an arrow on the tire sidewall.

- Position the wheel so that the air valve [A] is toward the outside of the vehicle.
- Tighten the wheel nuts in a criss-cross pattern.
  Torque- Wheel Nuts: 52 N-m (5.3 kgf-m, 38 ft-lb)

Wheel (Rim) Inspection

- Examine both sides of the rim for dents [A]. If the rim is dented, replace it.

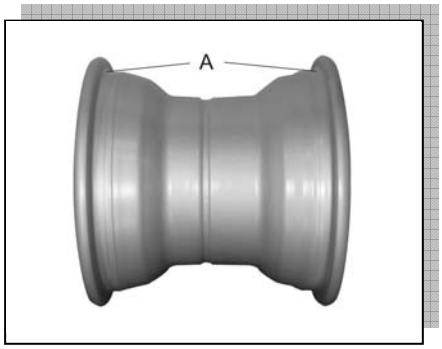

- If the tire is removed, inspect the air sealing surfaces [A] of the rim for scratches or nicks. Smooth the sealing surfaces with fine emery cloth if necessary

Wheel (Rim) Replacement

- Remove the wheel (see Wheel Removal)
- Disassemble the tire from the rim (see Tire Removal).
  - Remove the air valve and discard it.

CAUTION:
Replace the air valve whenever the tire is replaced. Do not reuse the air valve.

- Install a new air valve in the new rim.
  - Remove the valve cap, lubricate the stem with a soap and water solution, and pull the stem [A] through the rim from the inside out until it snaps into place.

CAUTION:
Do not use engine oil or petroleum distillates to lubricate the stem because they will deteriorate the rubber.

- Mount the tire on the new rim (see Tire Installation).
- Install the wheel (see Wheel Installation).

TIRES

Tire Removal

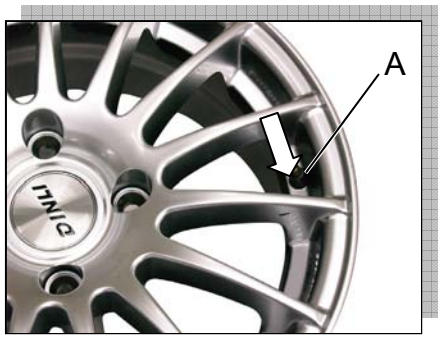

- Remove the wheel.
- Unscrew the valve core to deflate the tire.
  - Use a paper valve core tool.
- Lubricate the tire beads and rim flanges on both sides of the wheel with a soap and water solution, or water. This helps the tire beads slip off the rim flanges.

CAUTION:
Do not lubricate the tire beads and rim flanges with engine oil or petroleum distillates because they will deteriorate the tire.

- Remove the tire from the rim using a suitable commercially available tire changer.

NOTE
○ The tires cannot be removed with hand tools because they fit the rims tightly.

Tire Installation

● Inspect the rim (see Wheel (Rim) Inspection).

● Replace the air valve with a new one.

CAUTION:
Replace the air valve whenever the tire is replaced. Do not reuse the air valve.

● Check the tire for wear and damage (see Tire Inspection)

● Lubricate the tire beads and rim flanges with a soap and water.

⚠WARNING
Do not use the lubricant other than a water and soap solution, or water to lubricate the tire beads and rim because it may cause tire separation.

● Check the tire rotation mark [A] on the tire, and install the tire on the rim accordingly.

○ The tires should be installed on the rims so that each air valve is toward outside of the vehicle.

NOTE
○ The direction of the tire rotation is shown by an arrow on the tire sidewall.

● Install the tire on the rim using a suitable commercially available tire changer.

● Lubricate the tire beads again and center the tire on the rim.

● Support the wheel rim [A] on a suitable stand [B] to prevent the tire from slipping off.

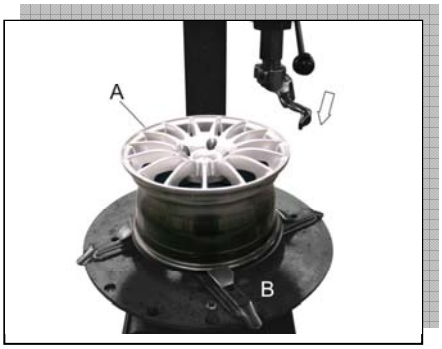

● Inflate the tire until the tire beads seat on the rim.

⚠WARNING
Do not inflate the tire to more than the maximum tire air pressure. Over inflation can explode the tire with possibility of injury and loss of line.

● Check to see that rim lines [A] on both sides of the tire are parallel with the rim flanges [B].

◎If the rim lines and the rim flanges are not paralleled, deflate the tire, lubricate the sealing surfaces again, and re-inflate the tire.

● After the beads are properly seated, check for air leaks.

○ Apply a soap and water solution around the tire bead and check for bubbles.

● Deflate the tire to the specified pressure.

● Check the tire pressure using an air pressure gauge.

Tire Air Pressure (when cold)

Front: **35 kPa (5.0 psi)**

Rear: **30 kPa (4.4 psi)**

● Install the wheel (see Wheel Installation).

● Wipe off the soap and water solution on the tire and dry the tire before operation.

⚠WARNING
Do not operate the vehicle with the water and soap still around the tire beads. They will cause tire separation, and a hazardous condition may result.

Tire Inspection

● Examine the tire for damage and wear.

○ If the tire is cut or cracked, replace it.

○ Lumps or high spots on the tread or sidewalls indicate internal damage requiring tire replacement.

○ Remove any foreign objects from the tread. After removal, check for leaks with a soap and water solution.

○ Check the shape of the tread knobs. If no vertical side is left on the drive side of the knobs, replace the tire.

Front Hub

Front Hub Removal

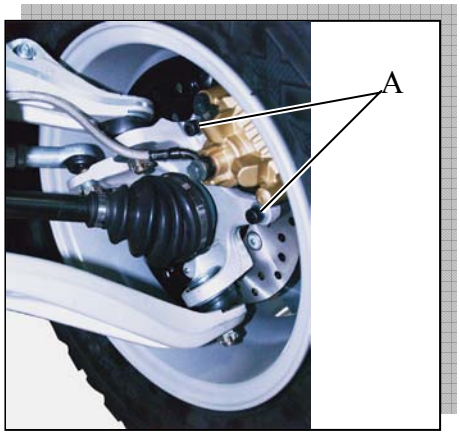

● Remove the wheel (see Wheel Removal).
● Remove the cotter pin
● Remove the caliper by taking off the mounting bolts [A], and let the caliper hang free.
● Remove the axle nut and pull off the front hub brake disc.
● Separate the brake disc from the front hub.

Front Hub Installation

● Grease::
  Seal
  Front Spindle
● Tighten:
  Torque - Front Spindle Nut: 54 N-m (5.5 kgf-m, 40 ft-lb)
● Insert a new cotter pin and bend it over the nut

Front Hub Disassembly/Assembly

● Don not press the hub bolts out.

◎If any hub bolt [A] is damaged, replace the hub [B] and bolts as a unit.

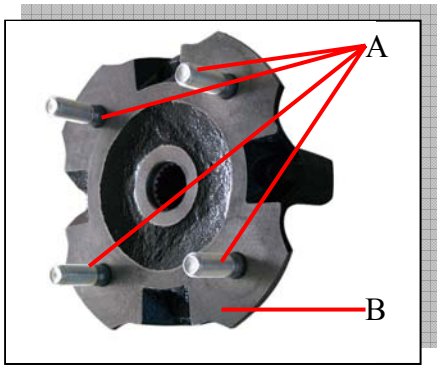

Rear Hub

Rear Hub Installation

● Grease the axle spindle.

● Apply non-permanent locking agent: Rear Axle Nuts

● Tighten:

Torque - Rear Axle Nut: 109 N-m (11.0 kgf-m, 80ft-lb)

● Insert a new cotter pin and bend it over the nut.

Rear Hub Disassembly/Assembly

● Do not press the hub bolts out.

◎If any hub bolt is damaged, replace the hub and bolts as a unit.

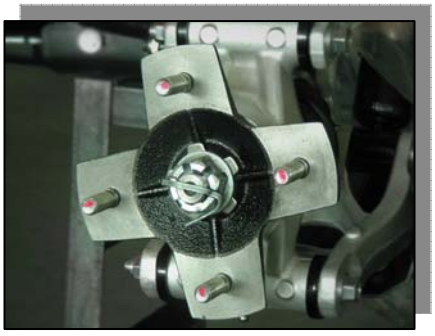

BRAKE

Table of Contents

Brake Fluid----------3-2
Brake Fluid Recommendation----------3-2
Brake Fluid Level Inspection----------3-3
Brake Fluid Change----------3-3
Brake Line Air Bleeding----------3-4
Master Cylinder----------3-5
Master Cylinder Removal----------3-5
Master Cylinder Installation----------3-5
Calipers----------3-5
Front Caliper Removal----------3-5
Rear Caliper Removal----------3-6
Caliper Installation----------3-6
Brake Pads----------3-7
Brake Pads Removal----------3-7
Brake Pads Installation----------3-7
Brake Pads Wear Inspection----------3-7
Brake Discs----------3-7
Disc Cleaning----------3-7
Front Brake Disc Removal----------3-8
Rear Brake Disc Removal----------3-8
Front Disc Installation----------3-8
Rear Disc Installation----------3-8
Disc Wear Inspection----------3-8
Disc Runout----------3-9
Brake Hoses----------3-9
Brake Hose Inspection----------3-9
Brake Hose Replacement----------3-9
Foot Brake----------3-10
Brake Pedal Position Inspection----------3-10
Brake Pedal Position Adjustment----------3-10
Brake Pedal Free Play Inspection----------3-10
Brake Pedal Removal----------3-10
Brake Pedal Installation----------3-10
Master Cylinder Removal----------3-11
Master Cylinder Installation----------3-11

Brake Fluid

⚠ WARNING
When working with the disc brake, observe the precautions listed below.

1. *Never reuse old brake fluid.*
2. *Do not use fluid from a container that has been left unsealed or that has or that has been open for a long time.*
3. *Do not mix two different brands of fluid for use in the brake. This lowers the brake fluid boiling point and could cause the brake to be ineffective. It may also cause the rubber brake parts to deteriorate.*
4. *Don't leave the reservoir cap off for any length of time to avoid moisture contamination of the fluid.*
5. *Don't change the fluid in the rain or when a strong wind is blowing.*
6. *Except for the disc pads and disc, use brake fluid, isopropyl alcohol, or ethyl alcohol for cleaning brake parts. Do not use any other fluid for cleaning these parts. Gasoline, engine oil, or any other petroleum distillate will cause deterioration of the rubber parts. Oil spilled on any parts will be difficult to wash off completely and will eventually deteriorate the rubber used in the disc brake.*
7. *When handing the disc pads or disc, be careful that no disc brake fluid or any oil gets on them. Clean off any fluid or oil that inadvertently gets on the pads or disc with a high flash-point solvent. Replace the pads with new ones if they cannot be cleaned satisfactorily.*
8. *Brake fluid quickly ruins painted surface; any spilled fluid should be completely washed away immediately.*
9. *If any of the brake line fittings or the bleed valve is opened at any time, the AIR MUST BE BLED FROM THE BRAKE LINE.*

Brake Fluid Recommendation

Recommended fluid is given in the table below. If none of the recommended fluid is available, use extra heavy-duty brake fluid only from a container marked DOT 3 or 4.

Brake Fluid Level Inspection

● Position the reservoir horizontal, and check the fluid level in the reservoir.

□If the fluid level is lower than the lower level line, check for fluid leakage of the brake line, and add the fluid as follow.

○ Removal the reservoir cap, and fill the reservoir to the upper level line [A] in the reservoir with the same type and brand of the fluid that is already in the reservoir.

And then install the reservoir cap.

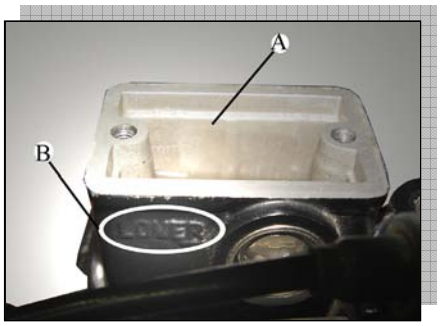

⚠ WARNING
Change the fluid in the brake line completely if the fluid must be refilled but the type and brand of the fluid that is already in the reservoir are unidentified.

● Tighten:

Torque - Reservoir Cap Screws: 1.5 N-m (0.15 kg-m, 13 in-lb)

Brake Fluid Change

● Remove the reservoir cap and the rubber cap on the bleed valve.

● Attach a clear plastic hose to the bleed valve on the caliper, and run the other end of the hose into a container.

● Fill the reservoir with new brake fluid.

● Change the brake fluid as follows:

○ Open the bleed valve [D].

○ Squeeze the brake lever and hold it [B].

○ Close the bleed valve [C].

○ Release the brake level [A].

● Check the fluid level in the reservoir often, replenishing it as necessary.

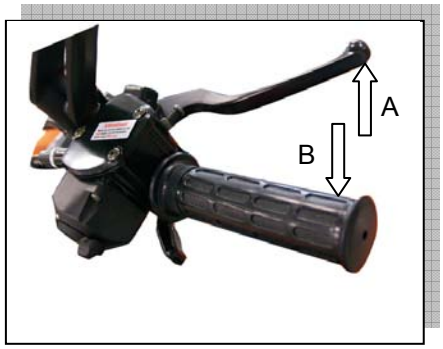

NOTE
○ If the fluid in the reservoir runs completely out any time during fluid change, air will enter the line, and the system must be bled.

● Repeat this operation until fresh brake fluid comes out into the plastic hose or the color of the fluid change.

⚠ WARNING
Do not mix two brand of fluid. Change the brake fluid in the brake line completely if the fluid must be refilled but the type and brand of the brake fluid that is already in the reservoir are unidentified.

● Tighten:
Torque - Bleed Valve: 5.4 N-m (0.55 kg-m, 48 in-lb)

● Apply the brake lever forcefully for a few second, and check for fluid leakage around the fittings.

⚠ WARNING
If the brake lever has a soft or "spongy feeling" when it is applied, there might be air in the brake line or the brake may be defective. Since it is dangerous to operate the vehicle under such condition, bleed the air from the brake line immediately.

Brake Line Air Bleeding

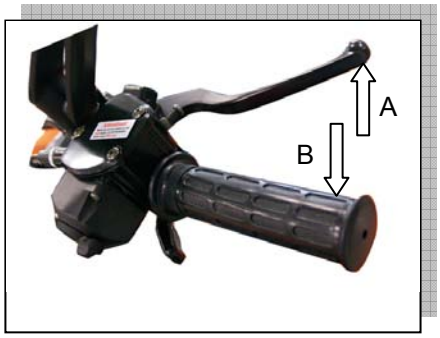

● Bleed the air whenever brake parts are replaced or reassembled.

● Remove the reservoir cap and fill the reservoir with new brake fluid.

● Slowly pump the brake lever several times until no air bubbles can be seen rising up through the fluid from the hose at the bottom of the reservoir. This bleeds the air from the master cylinder and the brake line.

NOTE
○Tap the brake hose lightly going from the caliper to the reservoir side and bleed the air off at the reservoir.

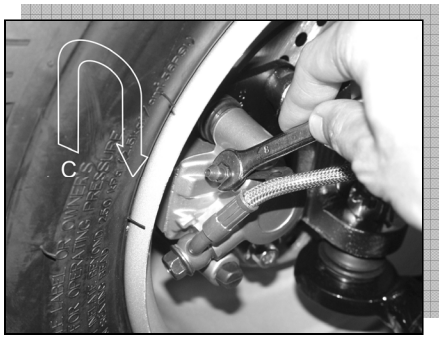

● Attach a clear plastic hose to the bleed valve on the caliper, and run the other end of the hose into a container.

● Bleed the brake line and the caliper as follows:

○ Hold the brake level applied [B].

○ Quickly open and close the valve [C].

○ Release the brake lever [A].

● The fluid level must be checked several times during the bleeding operation and replenished as necessary.

NOTE
○ If the fluid in the reservoir runs completely out any time during bleeding, the bleeding operation must be done over again from the beginning since air will have entered the line. ○ If the brake level action still feels soft or "spongy", tap the brake hose from bottom to top and air will rise up to part of the hose. Slowly pump the brake level in the same manner as above.

● Tighten:

Torque - Bleed Valves: 5.4 N-m (0.55 kg-m, 48 in-lb)

● Apply the brake lever forcefully for a few seconds, and check for fluid leakage around the fittings.

Master Cylinder

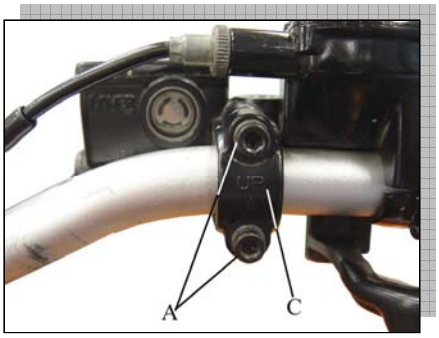

Master Cylinder Removal

●Removal:
Brake Hose Banjo Bolt [B]
Master Cylinder Clamp Bolts [A]
Master Cylinder

CAUTION
Brake fluid quickly ruins painted surface; any spilled fluid should be completely washed away immediately.

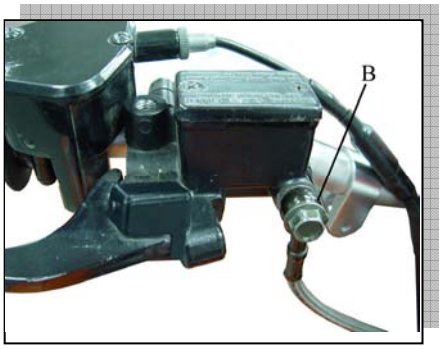

Master Cylinder Installation

- The master cylinder clamp must be installed with the "UP" mark [C] upwards.
- Tighten the upper clamp bolt first, and then the lower clamp bolt. There will be a gap at the lower part of the clamp after tightening.

Torque - Master Cylinder Clamp Bolts:
8.8N-m(0.90kg-m,78in-lb)

- Use a new flat washer on each side of the brake hose fitting, and tighten the banjo bolt.

Torque - Brake Hose Banjo Bolt:25N-m(2.5kg-m,18.0ft-lb)

- Bleed the brake line after master cylinder installation (see Brake Line Air Bleeding).
- Check the brake for good braking power and no fluid leakage.

⚠ WARNING
Do not attempt to drive the vehicle until a full brake lever is obtained by pumping the brake lever until the pads are against each disc. The brakes will not function on the first application of the lever if this is not done.

Caliper

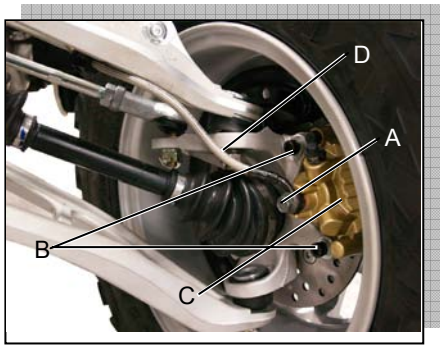

Front Caliper Removal

●Remove the front wheel (see Wheels/Tires chapter).
●Loosen the banjo bolt [A] at the brake hose lower end, and tighten it loosely.
●Unscrew the caliper mounting bolts [B], and detach the caliper [C] from the disc.
●Unscrew the banjo bolt and remove the brake hose [D] from the caliper.

CAUTION
Immediately wash away any brake fluid that spills.

NOTE
○If the caliper is to be disassembled after removal and if compressed air is not available, disassemble the caliper before the brake hose is removed (see Caliper Disassembly).

Rear Caliper Removal

●Remove the rear wheel (see Wheels/Tires chapter).

●Remove the exhaust pipe.

●Remove the rear drive shaft.

●Loosen the banjo bolt at the brake hose lower end, and tighten it loosely.

●Unscrew the caliper mounting bolts, and detach the caliper from the disc.

●Unscrew the banjo bolt and remove the brake hose from the caliper.

CAUTION
Immediately wash away any brake fluid that spills.

Caliper Installation

● Install the caliper and brake hose lower end.

○ Replace the washers that are on each side of hose fitting with new ones.

● Tighten:

Torque -Caliper Mounting Bolts:25N-m(2.5kg-m,18.0ft-lb)
Brake Hose Banjo Bolt:25N-m(2.5kg-m,18.0ft-lb)

● Check the fluid level in the brake reservoir.

● Bleed the brake line (see Brake Line Air Bleeding).

● Check the brake for good braking power, no brake drag, and no fluid leakage.

⚠ WARNING
Do not attempt to drive the vehicle until a full brake lever is obtained by pumping the brake lever until the pads are against each disc. The brakes will not function on the first application of the lever if this is not done.

Brake Pads

Brake Pad Removal

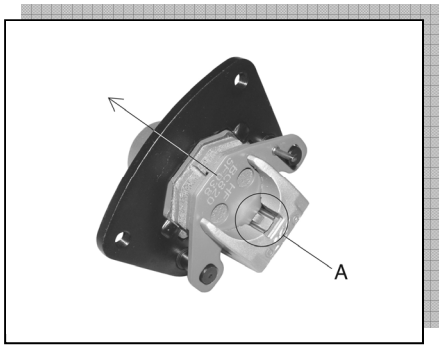

- Remove the wheels (see Wheels/Tires chapter).
- Remove the caliper (see Caliper Removal)
- Push the anti-rattle spring [A], remove the pads [B] [C].

Brake Pad Installation

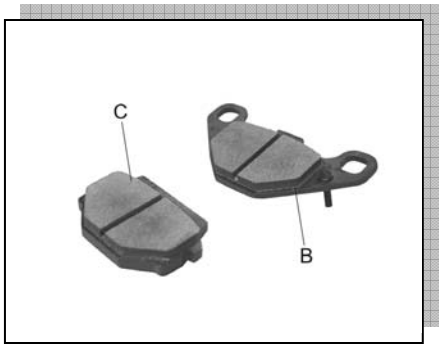

- Push the caliper piston in by hand as far as it will go.
- Be sure that the anti-rattle spring is in place.
- Install the pads
- Tighten:

Torque - Pad Mounting Bolts:18N-m(1.8kg-m,13.0ft-lb)

WARNING
Do not attempt to drive the vehicle until a full brake lever is obtained by pumping the brake lever until the pads are against each disc. The brakes will not function on the first application of the lever if this is not done.

Brake Pad Wear Inspection

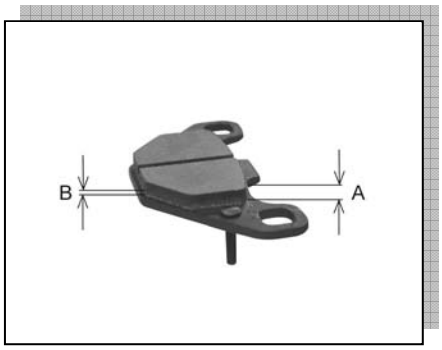

- Check the lining thickness [A] of the pads in each caliper.

□ If the lining thickness of either pad is less than the service limit [B], replace both pads in the caliper as a set.

Pad Lining Thickness:

Standard: 4.5mm

Service Limit: 2mm

Brake Discs

Disc Cleaning

Poor braking can be caused by oil on a disc. Oil on a disc must be cleaned off with an oil cleaning fluid such as trichloroethylene or acetone.

⚠ WARNING
These cleaning fluids are usually highly flammable and harmful if breathed for prolonged periods. Be sure to heed the fluid manufacturer's warnings.

Front Brake Disc Removal

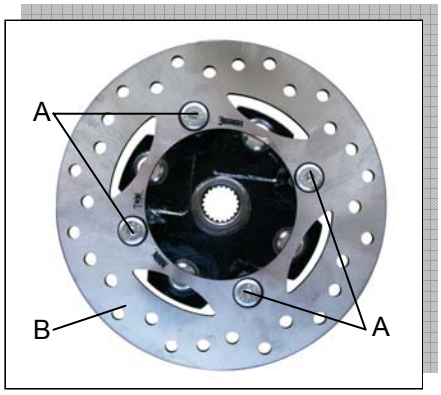

● Remove:
Front Hub (see Wheels/Tires chapter)
Brake Disc Mounting Bolts [A]
Brake Disc [B]

Rear Brake Disc Removal

● Remove the rear caliper (see Rear Caliper Removal) and Parking Brake Caliper, unscrew the banjo bolt and remove the brake hose from the caliper.

● Loosen the brake disc mounting bolts [A].

● Support the vehicle.

● Remove the rear wheel (see Wheel Removal).

● Remove the disc.

Front Disc Installation

● The disc must be installed with the marked side [A] facing toward the steering knuckle.

● Tighten:

Non-permanent Locking Agent - Disc Mounting Bolts
Torque - Disc Mounting Bolts: 37N-m(3.8kg-m,27ft-lb)

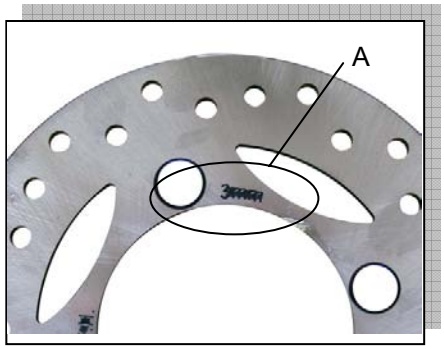

● After installing the discs, check the disc runout. Completely clean off any grease that has gotten on either side of the disc with a high flash point solvent.

Brake Disc Installation

● The disc must be installed with the marked side [A] facing toward front.

● Tighten:
Non-permanent Locking Agent - Disc Mounting Bolts
Torque - Disc Mounting Bolts: 37N-m(3.8kg-m, 27ft-lb)

● After installing the discs, check the disc runout (see Disc Runout). Completely clean off any grease that has gotten on either side of the disc with a high flash point solvent.

● Check the disc wear (see Disc Wear).

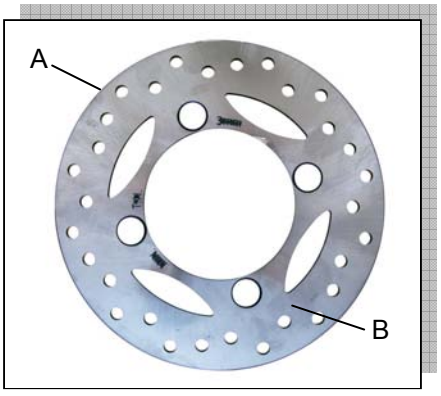

Disc Wear Inspection

● Measure the thickness of each disc at the point [A] where it has worn the most.

◎ Replace the disc if has worn past the service limit.
[B] Measuring Area

Front Disc Thickness
Standard: 3.5mm
Service Limit: 3mm
Rear Disc Thickness
Standard: 4 mm
Service Limit: 3.5mm

Disc Runout

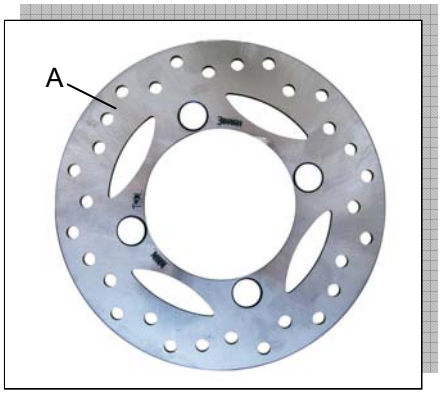

- Jack up the vehicle so that the wheels are off the ground.
- Remove the front wheels and turn the handlebar fully to one side.
- Set up a dial gauge against the disc [A], and measure the disc runout.

◎ If the runout exceeds the service limit, replace the disc.

Disc Runout
Standard: TIR 0.2 mm or less
Service Limit: TIR 0.3 mm

Brake Hoses

Brake Hose Inspection

- The high pressure inside the brake line can cause fluid to leak or the hose to burst if the line is not properly maintained. Bend and twist the brake hose while examining it.

◎Replace it if any cracks or bulges are noticed.

Brake Hose Replacement

- Pump the brake fluid out of the line as explained in the Brake Fluid Change.
- Remove the banjo bolts at both ends of the brake hose, and pull the hose off the vehicle.
- Immediately wipe up any brake fluid that spills.

CAUTION
Brake fluid quickly ruins painted surfaces; any spilled fluid should be completely washed away immediately.

- Use a new flat washer for each side of the hose fittings.
- Install the new brake hose in its place, and tighten the banjo bolts.

Torque - Brake Hose Banjo Bolts: 25N-m(2.5kg-m,18.0ft-lb)

Foot Brake

Brake Pedal Position Inspection

●Check that the brake pedal [A] is in the correct position as shown.

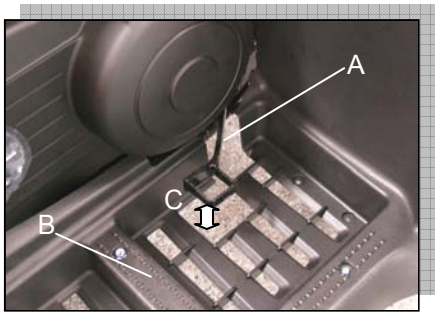

Pedal Position [C]

Standard: 72 ~ 80 mm above footrest

◎ If it is correct, adjust the brake pedal position.

Brake Pedal Position Adjustment

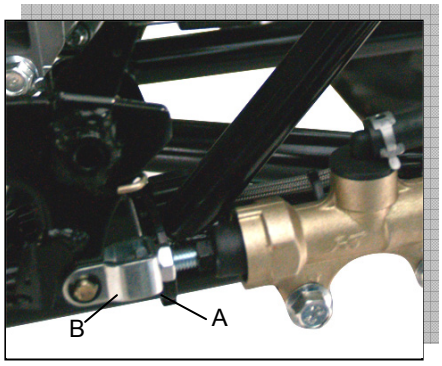

- Remove the brake pedal (see Brake Pedal Removal).
- Loosen the nut [A], and turn the bracket [B] until pedal is correctly positioned.
- Tighten the nut [A].
- Check the brake pedal free play (see Brake Pedal Free Play Inspection).

Brake Pedal Free Play Inspection

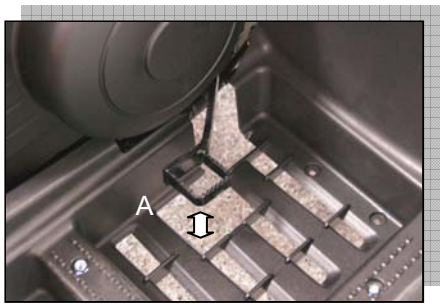

- Check the brake pedal free play [A].

○ Depress the brake pedal lightly by hand until the brake is applied.

◎ If the free play is incorrect, adjust it.

Pedal Free Play

Standard: 2.2 ± 0.5 mm

Brake Pedal Removal

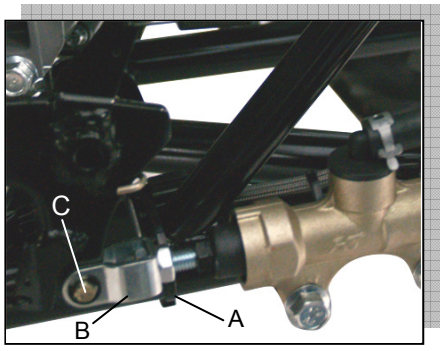

●Remove:

Cir-clip [B]
Pin [C]
Master Cylinder Joint [A]

●Pulling down the springs (where circled), remove the brake pedal.

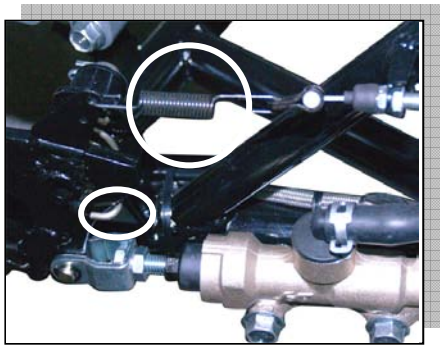

Brake Pedal Installation

- Reverse the Removal steps to install the brake pedal.

Master Cylinder Removal

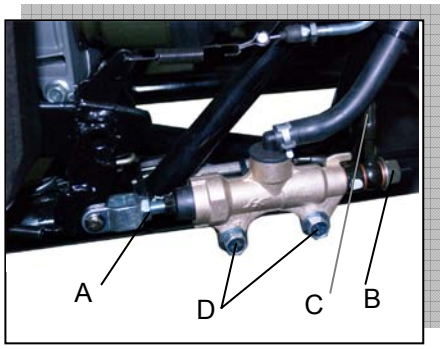

●Remove the master cylinder joint [A] and the banjo bolt [B] at the brake hose lower end, and tighten it loosely.
●Remove the brake hose [C].
●Loosen the master cylinder mounting bolts [D].

CAUTION
Brake fluid quickly ruins painted surfaces; any spilled fluid should be completely washed away immediately.

●Remove:
Fastener [A]
Hose [B]
Reservoir [C]

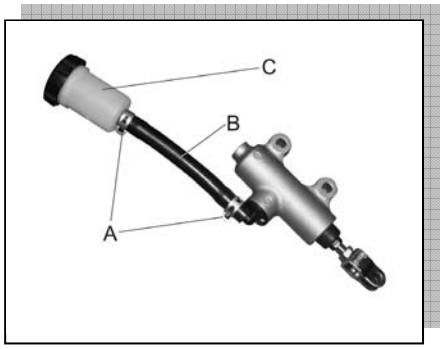

Master Cylinder Installation

● Use a new flat washer on each side of the brake hose fitting, and tighten the banjo bolt.

Torque -Brake Hose Banjo Bolt: 25N-m(2.5kg-m,18.0ft-lb)

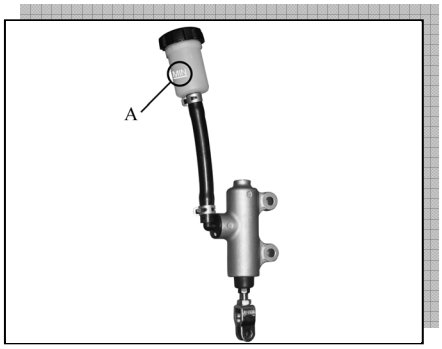

● Check the fluid level [A] in the brake reservoir.
● Bleed the brake line after master cylinder installation (see Brake Line Air Bleeding).
●Check the brake for good braking power and no fluid leakage.

⚠ WARNING
Do not attempt to drive the vehicle until a full brake lever is obtained by pumping the brake lever until the pads are against each disc. The brakes will not function on the first application of the lever if this is not done.

SUSPENSION & STEERING

Table of Contents

Shock Absorbers----4-2
Front Shock Absorber Removal----4-2
Front Shock Absorber Installation----4-2
Front Shock Absorber Inspection----4-2
Front Shock Absorber Preload Adjustment----4-2
Rear Shock Absorber Removal----4-2
Rear Shock Absorber Installation----4-2
Rear Shock Absorber Preload Adjustment ----4-3
Suspension Arms----4-3
Suspension Arm Removal----4-3
Suspension Arm Installation----4-3
Suspension Arm Disassembly----4-3
Suspension Arm Assembly----4-3
Steering----4-4
Steering Stem Removal----4-4
Steering Stem Installation----4-4
Steering Knuckle Removal----4-5
Steering Knuckle Installation----4-5
Tie-Rod Removal----4-5
Tie-Rod Installation----4-6
Tie-Rod End Removal----4-6
Tie-Rod End Installation----4-6
Steering Maintenance----4-6
Steering Inspection----4-6
Steering Stem Warp----4-7
Steering Lubrication----4-7
Steering Stem Clamp Inspection----4-7
Tie-Rod End and Steering Knuckle Joint Inspection----4-7
Handlebar----4-8
Handlebar Removal----4-8
Handlebar Installation----4-8
Transmission----4-8
Differential Gear Oil Inspection----4-8
Differential Gear Oil Replacement----4-9
Rear Driver Gear Oil Inspection----4-9
Rear Driver Gear Oil Replacement----4-9

Shock Absorbers

Front Shock Absorber Removal

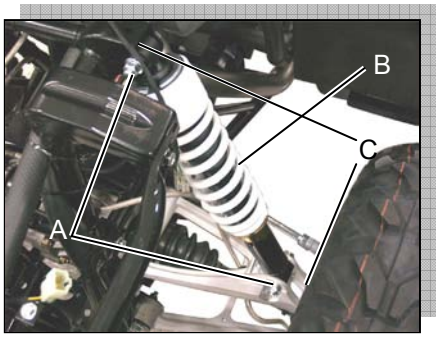

- While supporting the vehicle up with a jack.
- Remove:
  Front Shock Absorber Mounting Bolt and Nut [A]
  Front Shock Absorber [B]

Front Shock Absorber Installation

- Insert the shock absorber into the bracket [C].
- Tighten:

Torque - Mounting Bolts and Nuts:
47 N-m (4.8 kgf-m, 35 ft-lb)

- While supporting the vehicle down with a jack.

Front Shock Absorber Inspection

Since the front shock absorbers are sealed units, which cannot be disassembled, only external checks are necessary.

★ If one unit is damaged, replace both shock absorbers as a set. If only one unit is replaced and the two are not balanced, vehicle at high speed may endanger driver's safety.

Front Shock Absorber Preload Adjustment

The spring adjusting sleeve on rear shock absorber has 5 positions so that the spring can be adjusted for different terrain and loading conditions. If the spring action feels too soft or too stiff, adjust it in accordance with the following photograph.

- Turn the adjusting sleeve on shock absorber to the desired position with the wrench.

Rear Shock Absorber Removal

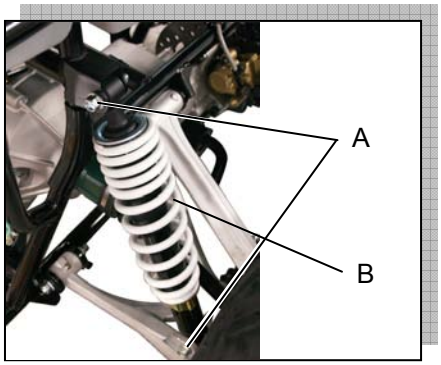

- Support the vehicle on a stand or a jack so that the rear wheels are off the ground.
- While holding the rear wheels, remove the lower and upper shock absorber mounting bolts [A] and nuts.
- Remove the rear shock absorber [B].

Rear Shock Absorber Installation

- Tighten-Torque-Rear Shock Absorber Mounting Nuts:

  6.2 N-m (6.3 kgf-m, 46ft.lb)

- See the Front Shock Absorber Preload Adjustment.

Rear Shock Absorber Preload Adjustment

- See the Front Shock Absorber Preload Adjustment

Suspension Arms

Suspension Arm Removal

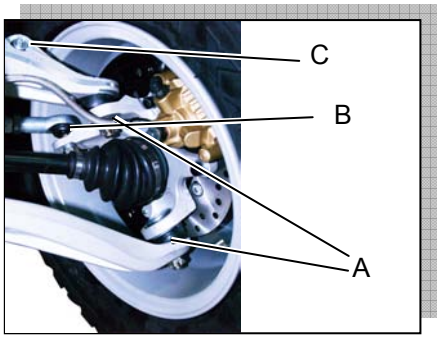

● Remove:
- Front Wheel (see Wheels/Tires chapter)
- Front Hub (see Wheels/Tires chapter)
- Cotter Pin, Nut and Bolt [A]
- Tie-Rod End [B]
- Front Shock Absorber Mounting Bolts [C]
- Suspension Arm Pivot Bolts [D]

Suspension Arm Installation

● Tighten:

Torque –
Suspension Arm Pivot Bolts: 88 N-m (9.0 kgf-m, 65 ft-lb)
Steering Knuckle Joint Nut: 42 N-m (4.3 kgf-m, 31 ft-lb)

Suspension Arm Disassembly

● Remove:
- Bolts
- Caps
- Bushings
- Spacer

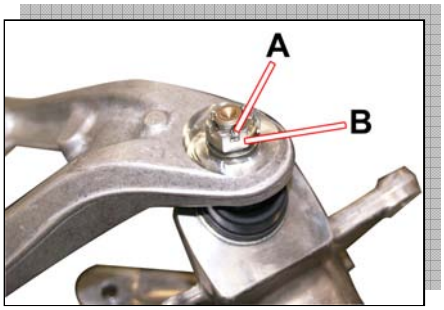

● Holding the suspension arm with a vise, remove the cotter pin[A] and unscrew the castle nut [B], and then remove the knuckle joint and circlip.

CAUTION
Do not remove the knuckle joint grease seal. It is packed with grease.

Suspension Arm Assembly

● When installing the rubber bushing into the arm, lubricate the outer surface of the bushings with a soap and water solution.

CAUTION
Do not lubricate the rubber bushings with engine oil or petroleum distillates because they will deteriorate the rubbers.

● Position the bushings in the suspension arm as shown using a suitable bearing driver in the bearing driver set.

Steering

Steering Stem Removal

● Remove:
Handlebar Holder Bolts ×2
Handlebar Holder Cover
Upper Handlebar Clamp bolts [A] ×4
Upper Handlebar Clamp
Handlebar (see Handlebar Removal)
Oil Tank Cover(see Frame Chapter)
Instrument Panel

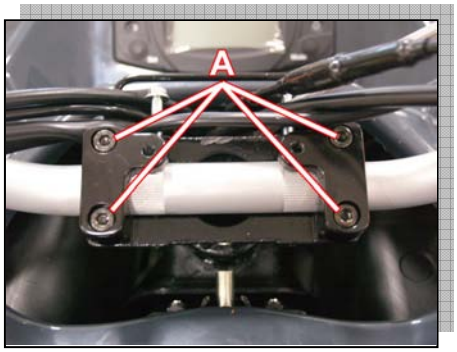

● Remove:
Steering Clamp Bolts [A]
Steering Clamp Support Plate [B]
Steering Clamp [C]
Tie-Rod End Nuts [D]
Steering Stem Cotter Pin [E] and Nut [F]

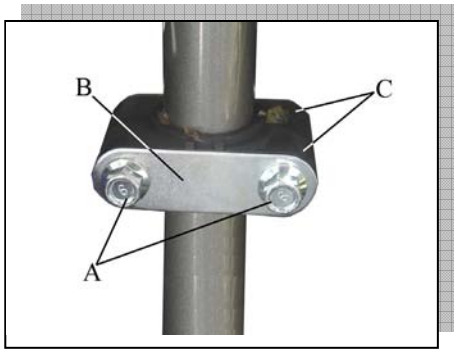

CAUTION
Do not loosen the locknut at the ends of the tie-rod adjusting sleeve, or the toe-in of the front wheels will be changed.

● To remove the steering stem bearing [G], remove the cotter pin and nut from the bottom end of the steering stem.

● Pull the steering stem out of the frame.

Steering Stem Installation

● Lubricate the steering stem clamp, grease seals (See Steering Lubrication).

● Install the grease seals [B] facing the end [A] rearward to prevent the entry of dirt.

● Install the steering stem clamps on both grease seals, fit into the groves on the steering stem clamps [C].

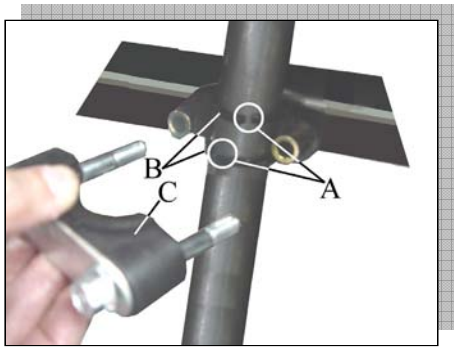

● Tighten:

Torque –

Bottom End Nut: 29 N-m (3.0 kgf-m, 22 ft-lb)
Bearing Housing Bolts: 20 N-m (2.0 kgf-m, 14.5 ft-lb)
Clamp Allen Bolts: 25 N-m (2.5 kgf-m, 18.0 ft-lb)
Tie-Rod End Nuts: 47 N-m (4.8 kgf-m, 35 ft-lb)

● Inspect the toe-in if necessary.

Steering Knuckle Removal

● Remove:
Front wheel and Hub (see Wheels/Tires chapter)
Brake Hose Clamp
Tie-Rod End Nut [A] and Tie-Rod End

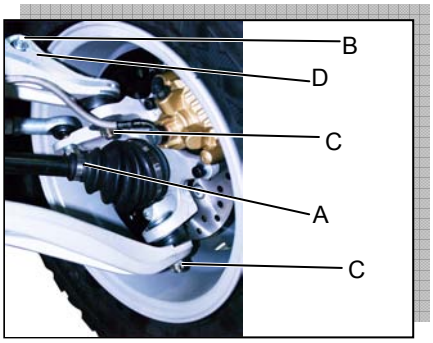

CAUTION
Do not loosen the locknuts at the ends of the tie-rod adjusting sleeve, or the toe-in of the front wheels will be changed.

● Remove:
Front Shock Absorber Clamp Bolt [B] and Nut
Knuckle Joint Bolt [C] and Nut
Suspension Arm [D]

Steering Knuckle Installation

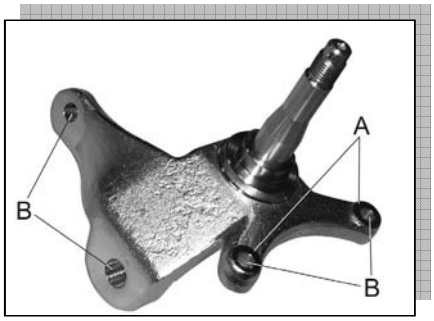

● Clean the sealing surface [A] and the hole [B].
● Grease the sealing surface.
● Tighten:

Torque –
Suspension Arm Pivot Bolts: 88 N-m (9.0 kgf-m, 65 ft-lb)
Steering Knuckle Joint Nut: 42 N-m (4.3 kgf-m, 35 ft-lb)
Front Shock Absorber Clamp Nut:
52 N-m (5.3 kgf-m, 38 ft-.lb)
Tie-Rod End Nut: 47 N-m (4.8 kgf-m, 35 ft-lb)

Tie-Rod Removal

● Remove:
Tie-Rod End Nuts [A]
Tie-Rod [B]

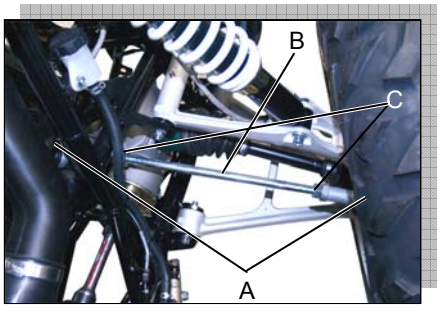

CAUTION
When removing the tie-rod, be careful not to bend it. Do not loosen the locknut [C] at the end of the tie-rod adjusting sleeve, or the toe-in of the front wheel will be changed.

Tie-Rod Installation

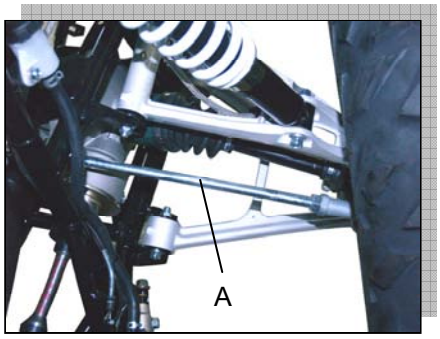

- The right and left tie-rods are identical.
- Install the tie-rod with the flattened area [A] located inboard.
- Tighten:
  Torque - Tie-Rod End Nuts: 47 N-m (4.8 kgf-m, 35 ft-lb)
- Inspect the toe-in if necessary

Tie-Rod End Removal

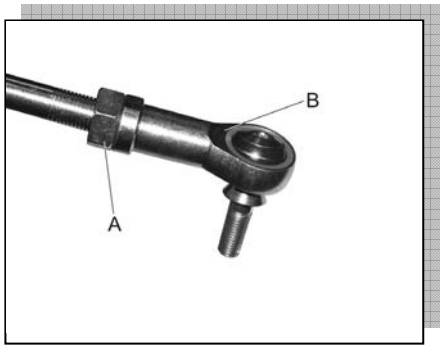

- Remove the tie-rod (see Tie-Rod Removal)
- Holding the tie-rod flattened area; loosen the locknut [A] and unscrews the tie-rod end [B].

NOTE
○The locknut on the tie-rod has left-hand threads. Turn the wrench clockwise for loosening.

CAUTION
Do not remove the grease seal. It is packed with grease.

Tie-Rod End Installation

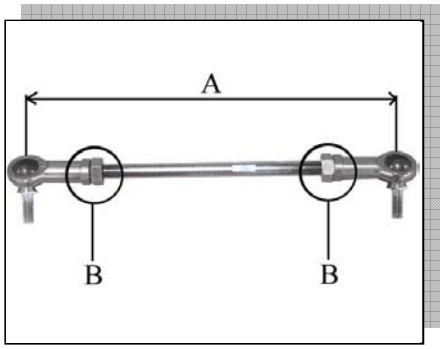

- Install the tie-rod ends so that the tie-rod has the correct length [A], and the both visible thread length [B] make equal.

  Tie-Rod Length Standard: 398 mm

- Tighten:
  Torque –
  Tie-Rod adjusting Sleeve Locknut:
  27 N-m (2.8 kgf-m, 20 ft-lb)

Steering Maintenance

Steering Inspection

- Turn the handlebar left and right, and check the steering action.
- If the steering is not smooth, or if the steering binds or catches before the stop, lubricate the steering.

NOTE
○The cables and wires will have some effect on the steering action which must be taken into account.

- Check the steering action again.

◎ If the steering lubrication does not remedy the problem, inspect the steering stem warp, steering stem clamps, and tie-rod bearings.

◎ If you feel looseness, or if the steering rattles as it turns, check the tightness of the steering bolts and nuts.

● Tighten loose bolts and nuts to the specified torque (see Exploded View), and check the steering action again.

◎ If the steering action does not change by tightening the bolts and nuts, inspect the steering stem clamps, steering stem bearing, tie-rod bearings, and steering knuckle joints.

Steering Stem Warp

● Remove the steering stem (see Steering Stem Removal).

● Check the steering stem for straightness.

○ Use a straightedge rule along the stem.

◎ If the steering stem is bent, replace the steering stem.

Steering Lubrication

● Lubricate the steering stem clamps.

○ Remove the steering stem (see Steering Stem Removal).

○ Wipe all the old grease off the steering stem, and clamps, and out of the grease seals.

○Apply grease to the steering stem [A], grease seal lips and mating surface [B] of the clamp, and pack the grooves [C] in the clamp with grease.

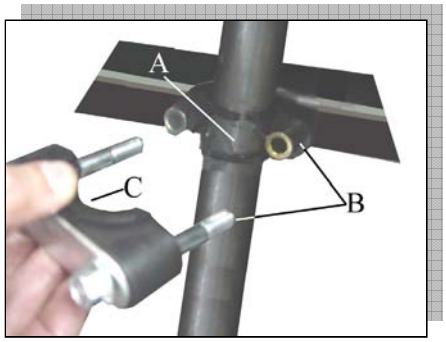

Steering Stem Clamp Inspection

● Inspect the steering stem clamps [A].

◎ If roughness, excessive play, or seizure is found, replace both clamps.

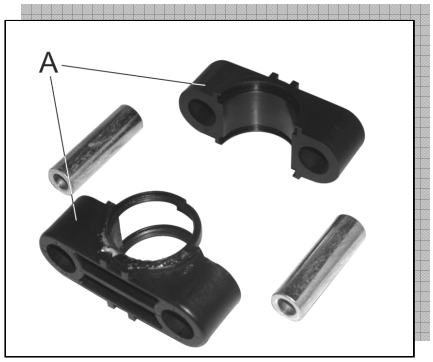

Tie-Rod End and Steering Knuckle Joint Inspection

●Inspect each spherical bearing [A].

◎ If roughness, excessive play, or seizure is found, replace the tie-rod end, or steering knuckle joint.

◎ If damage, wear or deterioration is found, replace the tie-rod end.

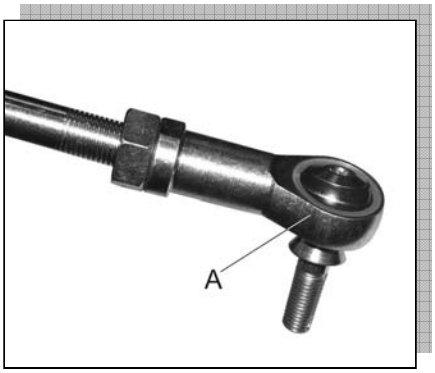

Handlebar

Handlebar Removal

● Remove:
Throttle Switch
Front Brake Master Cylinder
Left Lever Switch Housing
Right Lever Switch
Handlebar Cover Screw
Handlebar Cover

● Remove:
Handlebar Holder Bolts [A]
Handlebar Holders [B]
Handlebar [C]

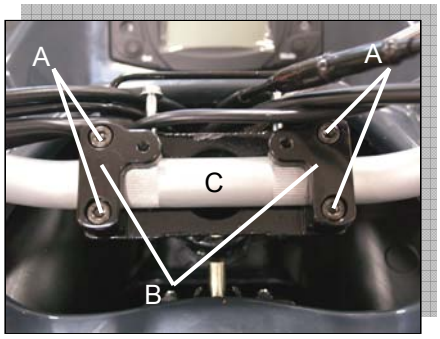

Handlebar Installation

● Install the handlebar so that the angle of the handlebar matches the angle of the steering stem as shown.

● Tighten the holder rear bolts first and then the front bolts.

Torque –
Handlebar Holder Bolts: 27 N-m (2.8 kgf-m, 20 ft-lb)

○ If the holder is correctly installed, there will be no gap at the rear and an even gap at the front after tightening.

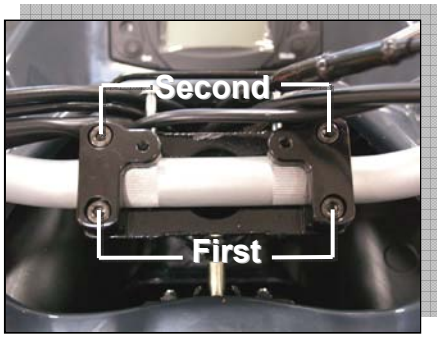

Transmission

Differential Gear Oil Inspection

NOTE
○ Inspect every 2,000 km (100 hours, 6 months). Replace every 2 years.

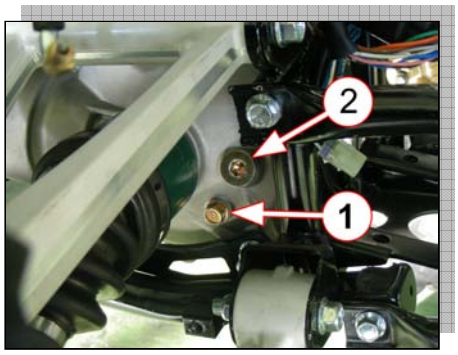

● Place the vehicle on level ground.

● Remove the oil level plug [1] and oil filler plug [2], and inspect the oil level. If the oil level is below the level hole, add fresh oil until oil flows from the level hole.

- Tighten the oil level plug [1] and oil filter plug [2] to the specified torque.

Differential Gear Oil Replacement

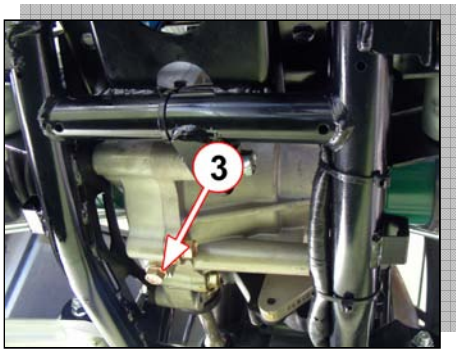

- Place the vehicle on level ground.
- Remove the front under protector.
- Place an oil pan below the differential gear case.
- Drain oil by removing the oil drain plug [3], oil filter plug [2] and oil level plug [1].
- Tighten the oil drain plug [3] to the specified torque and pour fresh oil through the oil filter hole until it overflows from the oil level hole.
- Tighten the oil level plug [1] and oil filter plug [2] to the specified torque.
- Install the front under protector.

Differential Gear Oil Specification:

Hypoid gear oil SAE#80, API grade GL-5

Torque –

Front differential gear oil level plug :
9 N-m (0.9 kgf-m, 6.5 ft-lb)

Front differential gear oil drain plug :
32 N-m (3.2 kgf-m, 23.0 ft-lb)

Front differential gear oil filler plug :
35 N-m (3.5 kgf-m, 25.5 ft-lb)

Rear Driver Gear Oil Inspection

NOTE
○ Inspect every 2,000 km (100 hours, 6 months). Replace every year.

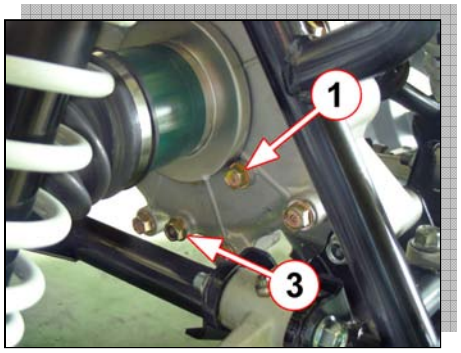

- Place the vehicle on level ground.
- Remove the oil level plug [1] and oil filler plug [2], and inspect the oil level. If the oil level is below the level hole, add fresh oil until oil flows from the level hole.
- Tighten the oil level plug [1] and oil filter plug [2] to the specified torque.

Rear Driver Gear Oil Replacement

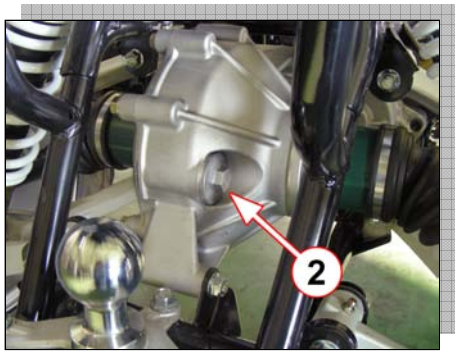

- Place the vehicle on level ground.
- Remove the rear under protector.
- Place an oil pan below the differential gear case.

- Drain oil by removing the oil drain plug [3], oil filter plug [2] and oil level plug [1].
- Tighten the oil drain plug [3] to the specified torque and pour fresh oil through the oil filter hole until it overflows from the oil level hole.
- Tighten the oil level plug [1] and oil filter plug [2] to the specified torque.
- Install the front under protector.

Rear Driver Gear Oil Specification:

Hypoid gear oil SAE#80, API grade GL-5

FRAME

Table of Contents

Seat----------5-2
Seat Removal----------5-2
Seat Installation----------5-2
Front and Rear Fenders----------5-2
Front Fender Removal----------5-2
Front Fender Installation----------5-4
Rear Fender Removal----------5-4
Rear Fender Installation----------5-4
Radiator Removal----------5-4
Radiator Installation ----------5-5
Foot Board Removal----------5-5
Headlight Assembly Removal----------5-5

Seat

Seat Removal

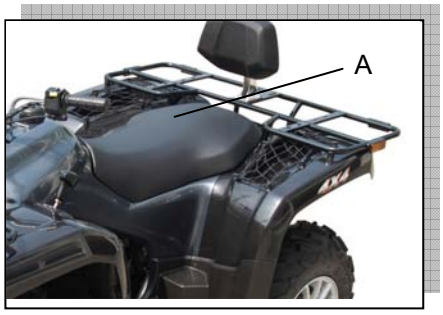

- To remove seat [A], insert the key to the main switch.
- Push inward the key and turn it counter-clockwise to seat open position [B].
- Lift the seat front slightly, pull it toward the front and remove the seat.

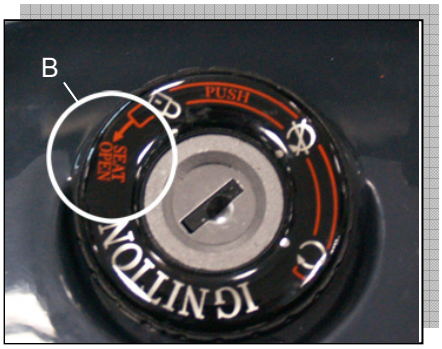

Seat Installation

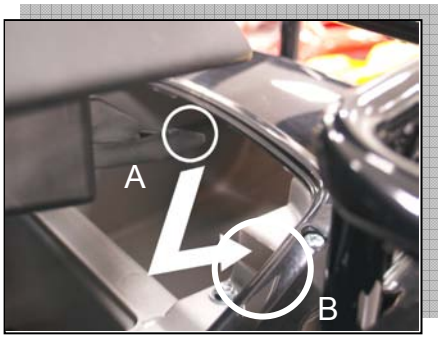

- Align the catch [A] at the back of the seat with the receiver [B] on the frame.
- Slip the seat hook [C] under seat into lock [D].
- Push the front of the seat until you hear the click sound to lock the seat.

Front and Rear Fenders

Front Fender Removal

- Remove:
  Seat
  Handlebar holder cover
  Disconnect Instrument Panel
  Fuel tank decoration
  Front rack

- Remove front fender decoration [B] by inserting the opening stick into the hole [A] to open it.

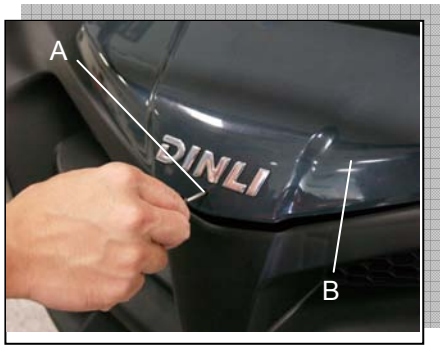

- Remove the maintenance compartment

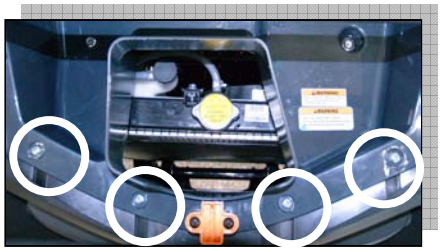

- Remove headlight by unscrewing the screws [C]×6

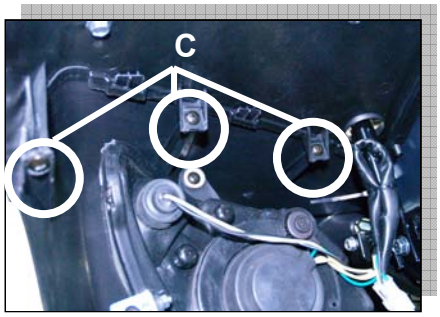

- Remove headlight shade by unscrew the screws [D]×6

- Remove under cover of front fender by unscrew the screws [E]×4

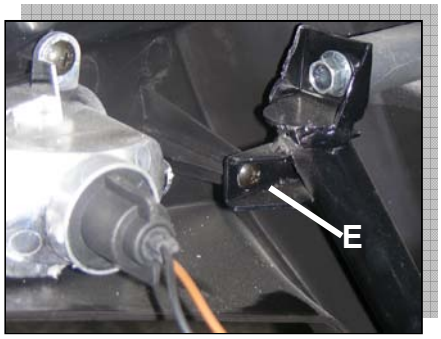

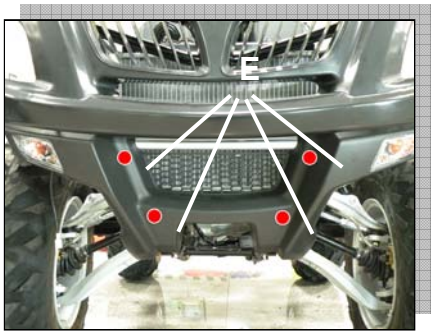

● Remove Left and Right Fender.

Front Fender Installation

● Please reverse the Removal steps to install.

Rear Fender Removal

● Remove:
Seat
Rear rack

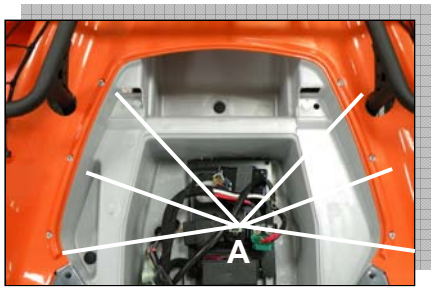

● Remove:
Pan head Screw [A]×6 (attach to luggage compartment)
Pan head Screw [B]×3 (attach to luggage compartment)
Machine Screw [C] ×6 (right×3, left×3, attach to footboard)

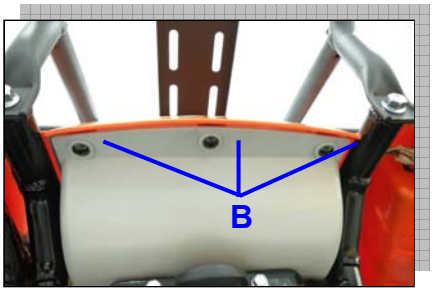

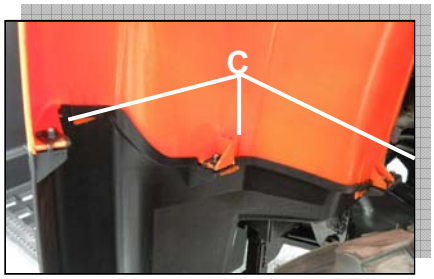

Rear Fender Installation

● Please reverse the Removal steps to install.

Radiator Removal

● Remove:
Front fender decoration
Headlight shade

Tube Clip and Water Hose ×2 [A]

Cooling fan switch [B]
Cooler bracket bolts ×4
Cooler bracket
Radiator Protector Bolts ×4
Radiator Protector
Reservoir water hose [C]
Reservoir tank bolt ×2
Reservoir tank

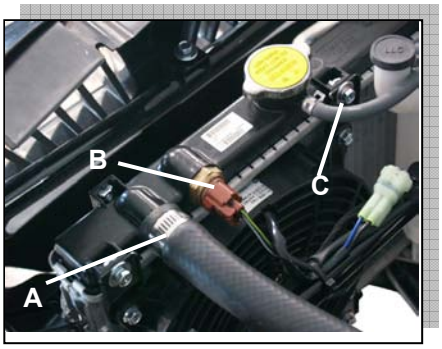

Radiator Installation

● Please reverse the Removal steps to install.

Foot Board Removal

● Remove:
Machine Screw ×6 (attach to front & rear fender)
Hex Washer Face Bolt ×2 (attach to body decoration)
Foot Board Bracket Bolts [A] ×4
Foot Board

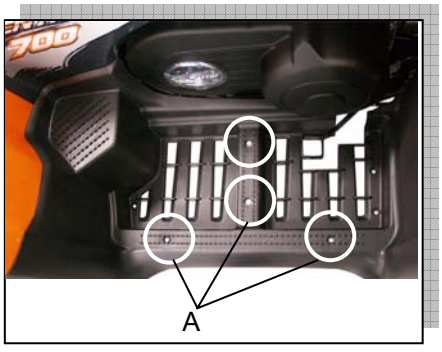

Headlight Assy Removal

● Remove:
Headlight Screws [A] ×3
Headlight Wire
Headlight

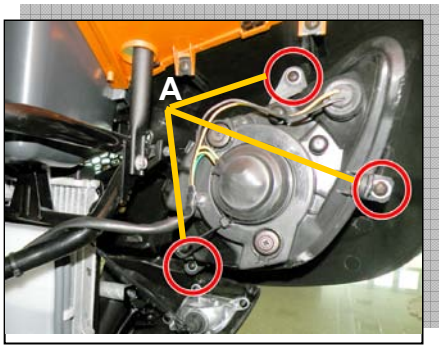

Engine

Table of Contents

Removal and Installation ----------6-2
Engine Removal----------6-2
Engine Installation----------6-5
Engine Disassembly ----------6-5
Engine Top Side----------6-5
Engine Bottom Side----------6-9
Inspection ----------6-15
Camshaft and Cylinder Head----------6-15
Cam Chain Tensioner----------6-19
Cam Chain Guide----------6-19
Cylinder----------6-19
Timing Gear----------6-19
Piston----------6-20
Connecting Rod----------6-21
Clutch----------6-22
Movable Drive Face and Driven Face----------6-23
Drive Belt----------6-25
Oil Pump----------6-25
Transmission----------6-26
Reassembly ----------6-26

Removal and Installation

Engine Removal

- Thoroughly clean the ATV engine and chassis.
- Clean work area.
- Drain coolant and engine oil.
- Remove the seat.
- Remove the side fenders.
- Remove the rear propeller shaft.

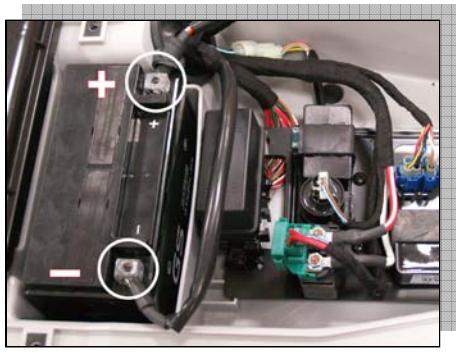

- Disconnect the battery lead wires

CAUTION
When disconnecting the battery lead wires, be sure to disconnect the ○, - battery lead wire first.

- Remove front and rear rack and fender.

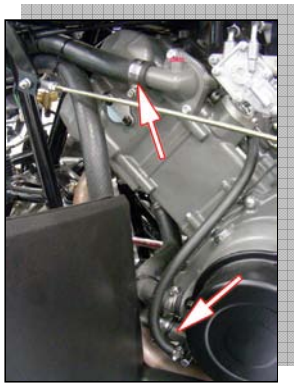

- Remove the water hoses.

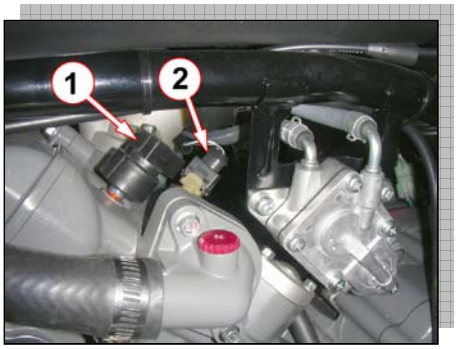

- Remove Subharness assembly coupler [1] and Coolant Temperature sensor coupler [2].

- Remove Stator assembly coupler [1] and Speed Sensor coupler [2].
- Remove Tie rod end of lever assembly rod.
- Remove Shift lever assembly [3].
- Remove air tube [4].

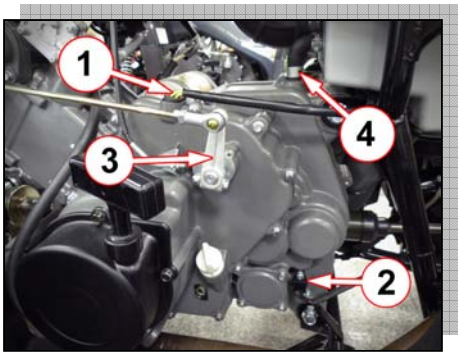

- Remove Starter Motor assembly coupler [1] and Gear shift indicator coupler [2].

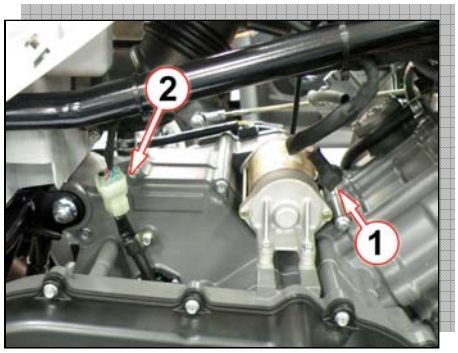

- Remove fuel feeding hoses.

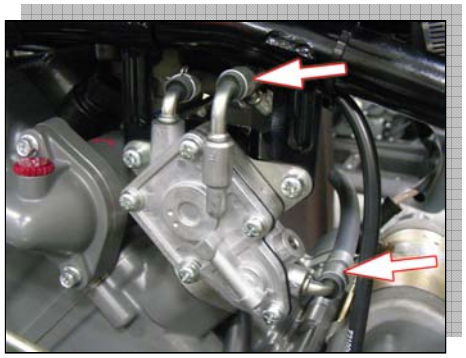

- Remove Regulator.

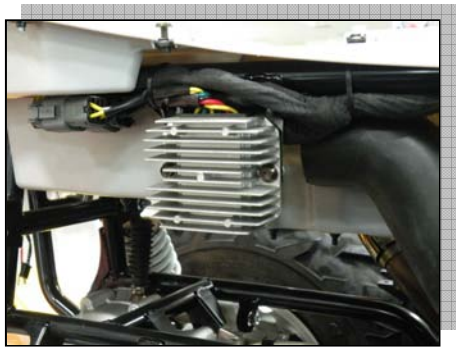

- Remove the CVT ducts. (Breather and outlet)

● Remove the Intake duct.

● Remove the Ignition coil.

● Remove the Exhaust pipe bolts.

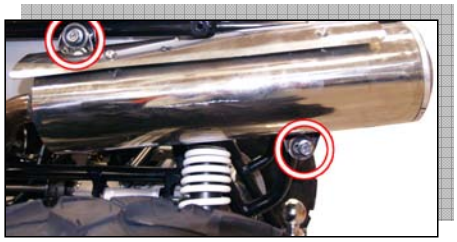

● Remove the muffler.

● Remove the right foot board.

● Remove the right foot board bracket bolts [1].

● Remove the right foot board bracket.

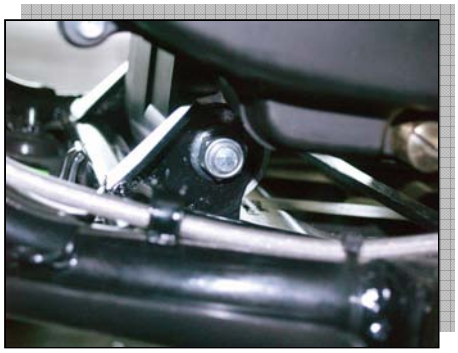

- Remove the foot brake pedal.
- Remove the front differential mounting bolts/nuts
- Slide the front differential assy forward.
- Remove the front propeller shaft spring.
- Remove the engine mounting bolts/nuts.

- Remove the engine from the right side.

Engine Installation

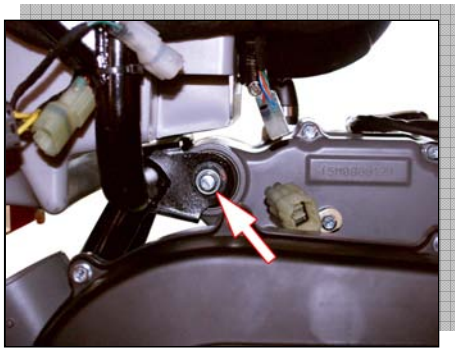

Remount the engine in the reverse order of engine removal.
Pay attention to the following points:

- Tighten the engine mounting nuts to the specified torque.

  Tightening Torque: 60N-m

- Tighten the front differential gear mounting nuts to the specified torque.

  Tightening Torque: 50N-m

- Apply thread lock to the nuts.

- When installing the shift lever rod, align the both serrations.

- Apply thread lock to the foot board bracket bolts, and tighten them to the specified torque.

  Tightening Torque: 55N-m

- Install the new gasket and tighten the muffler bolts and exhaust pipe nuts to the specified torque.

  Tightening Torque: 23N-m

Engine Disassembly

Engine Top Side

- Remove the front propeller shaft.
- Remove the spark plug

● Remove the start motor.

● Remove water hoses [1] and [2].

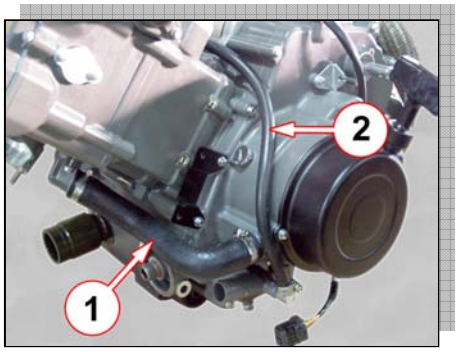

● Remove the recoil starter.

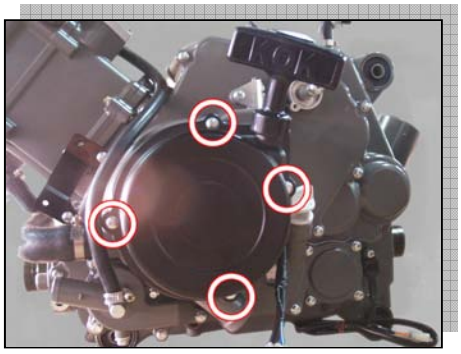

● Remove Timing screen cover.

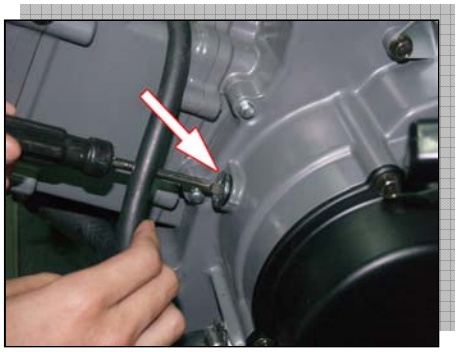

● Remove cylinder head cover.

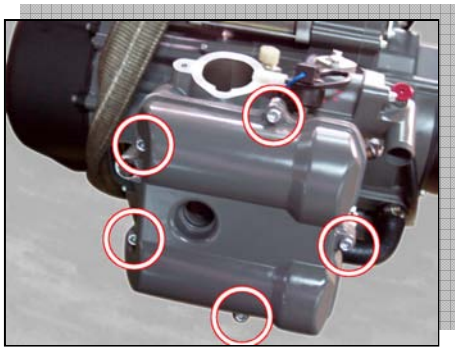

● Turn the crankshaft to bring the "TDC" line [A] on the starter clutch to the index mark [B] of the crankcase.

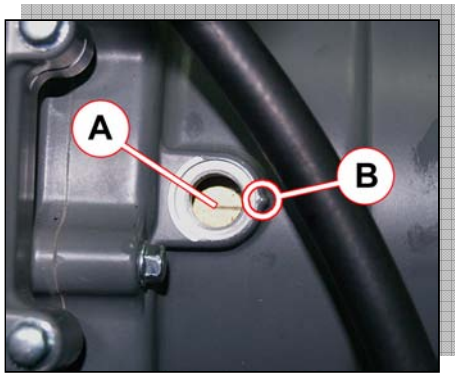

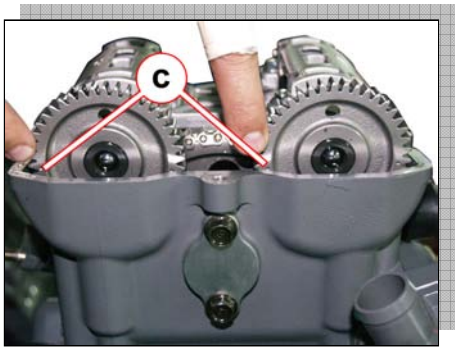

NOTE
At the above condition, the piston is at TDC of compression stroke and also the engraved marks [C] on the camshafts are parallel with the mating surface of the cylinder head cover.

● Remove the camshaft cover bolts [1] and camshaft cover.

CAUTION
Be sure to loosen the camshaft cover bolts evenly by shifting the wrench diagonally.

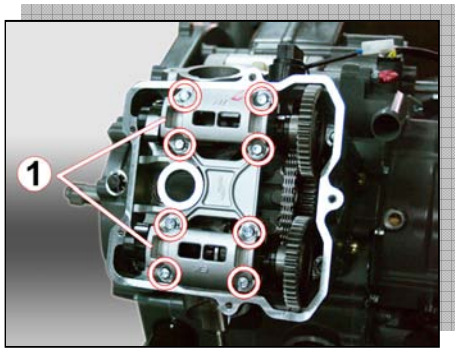

● Remove the pins and camshafts.

NOTE
Be careful not to drop the pins into the crankcase.

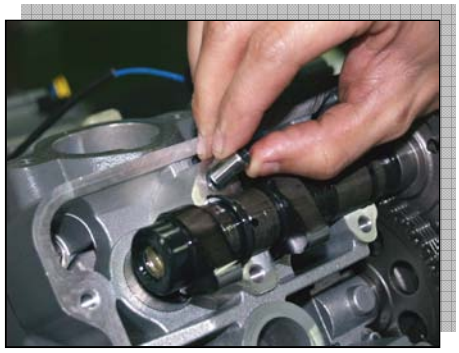

● Remove the cam chain tensioner bolt [1].

● Remove the cam chain tensioner [2].

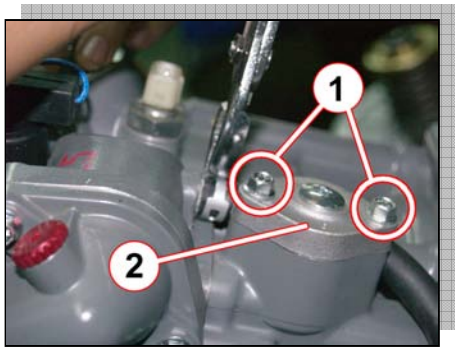

● Remove the cam driver gear [1] by removing the shaft cover [2], shaft [3] and the spacer [4].

NOTE
Be careful not to drop the spacer [4] into the crankcase.

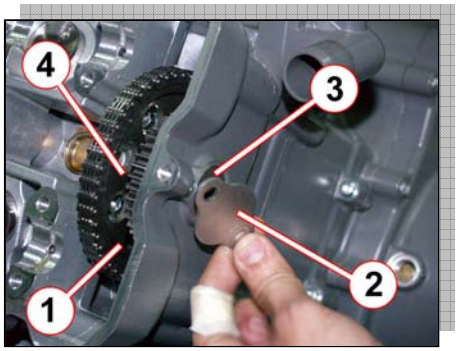

● Remove the cylinder head bolts (M6) [5].

NOTE
Loosen the cylinder nuts.

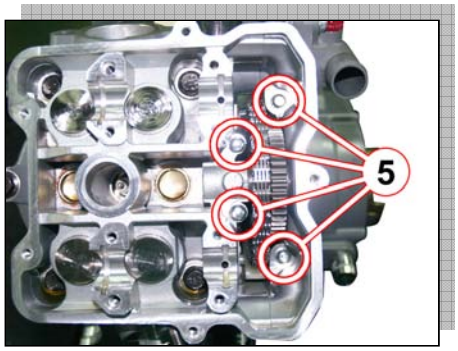

● Remove the cylinder head bolts (M10) and washers.

NOTE
When loosening the cylinder head bolts, loosen each bolt little by little diagonally.

● Remove the cylinder head [6].

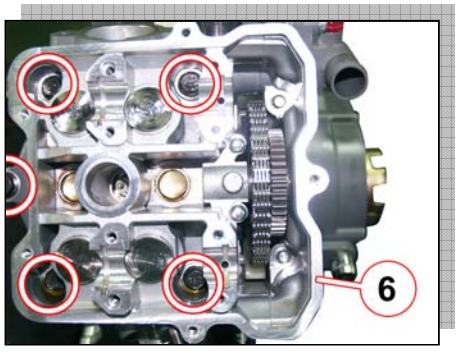

● Remove the dowel pins [1] and cylinder head gasket [2].
● Remove the cam chain guide [3].

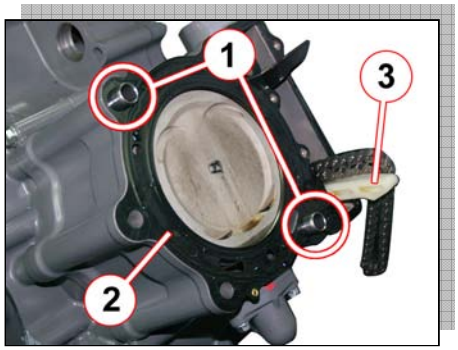

● Remove the cylinder nuts [4].
● Remove the cylinder [5].

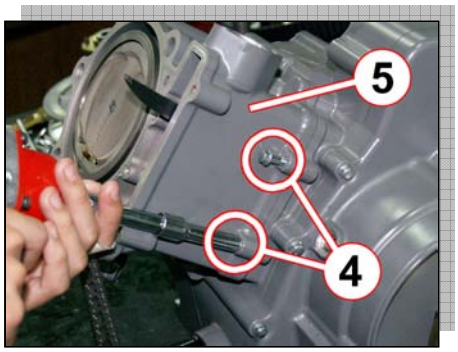

● Remove the dowel pins and the gasket.

NOTE
Be careful not to drop the dowel pins into the crankcase.

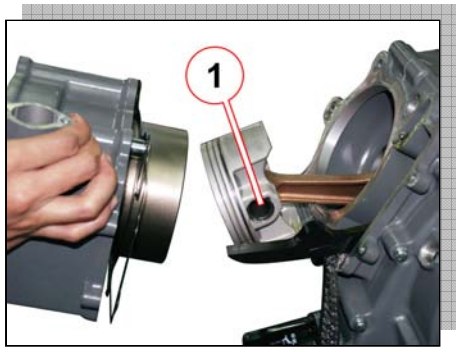

● Remove the piston by removing the piston pin circlip [1].

NOTE
Place a clean rag under the piston so as not to drop the piston pin circlip into the crankcase.

Engine Right Side

● Remove the oil filter with the special tool.

● Remove the water pump [1]

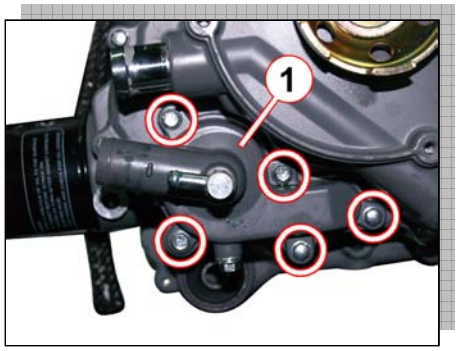

● Remove the start cup nut with a suitable bar [1].

● Remove the starter cup.

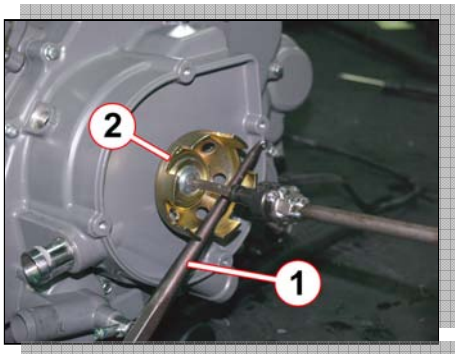

● Remove the left crankcase cover [3].

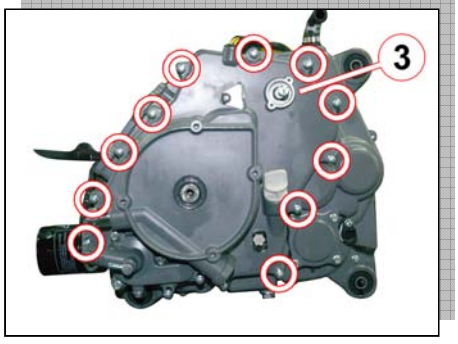

● Remove the dowel pins [4] and gasket [5].

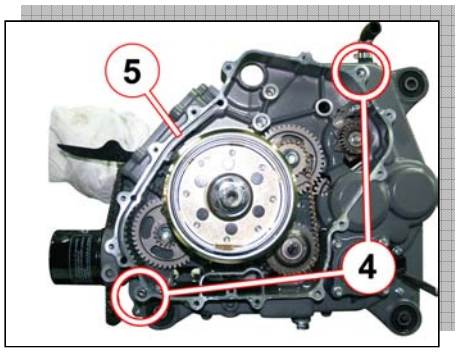

● Remove the generator rotor bolt.

● Install the special tool to the crankshaft end.

● Remove the generator rotor with the special tool.

● Remove the key [2].

● Remove the starter driven gear [3].

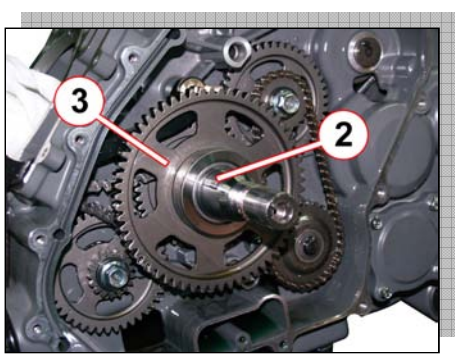

● Remove the cam chain tensioner bolt [1], cam chain tensioner [2].

● Remove the cam chain [1].

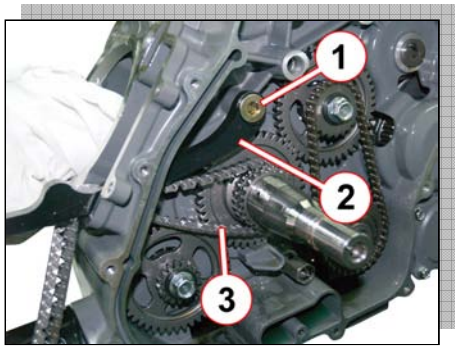

● Remove the snap ring [1].

NOTE
Be careful not to drop the snap ring [1] into the crankcase.

● Remove the oil pump drive chain [2] and oil pump driven gear [3].

● Remove the oil pump bolts and the oil pump.

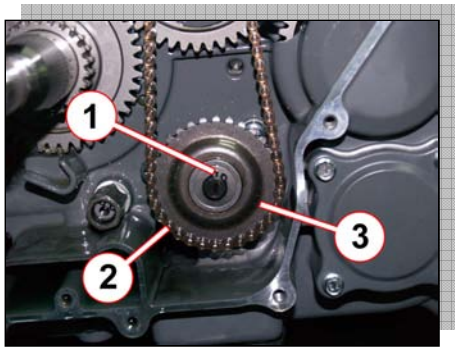

● Remove the balancer shaft driven gear bolts with the special tool.

● Remove the water pump drive gear [1] and oil pump driven gear [2].

● Remove the balancer shaft driven gears [3].

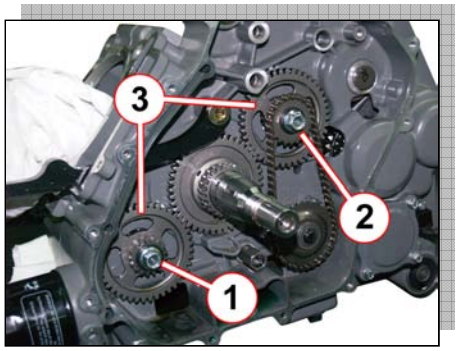

● Remove the clutch cover [1] and gasket.

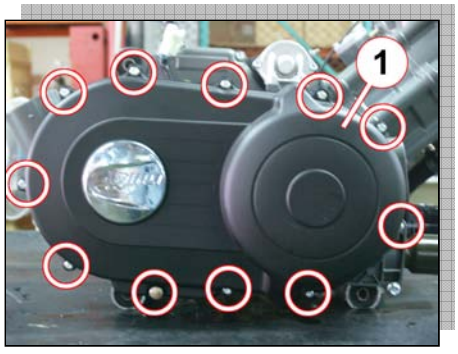

● Remove the movable drive face cover [1].

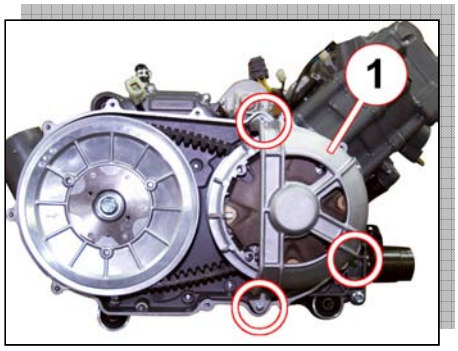

● Remove the movable drive face [2] by removing the bolt.

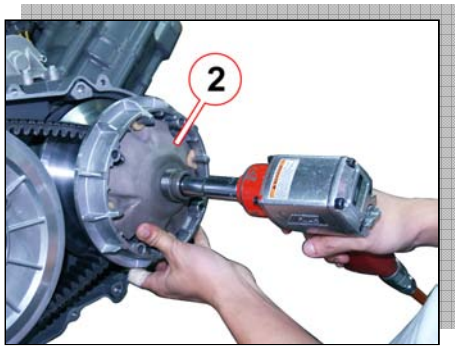

● Remove the movable driven face assembly by removing the bolt.

● Remove the drive belt.

● Remove the fixed drive face.

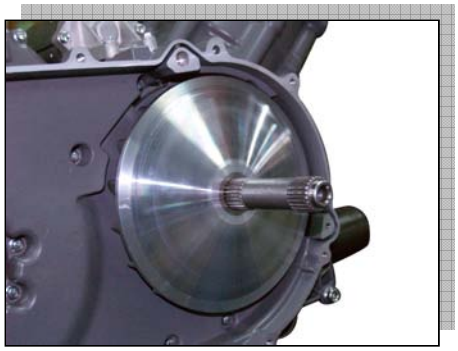

● Remove the front and rear output connectors.

● Remove the plate [1], clutch inner cover [2] with the clutch housing and gasket.

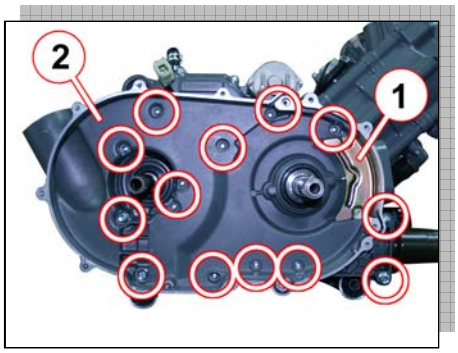

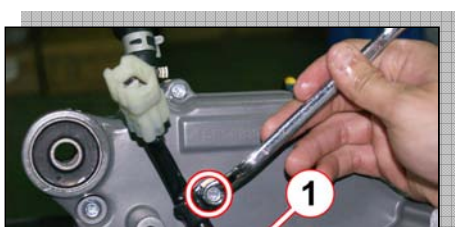

● Remove the gear shift indicator [1].

● Remove the clutch housing [1].

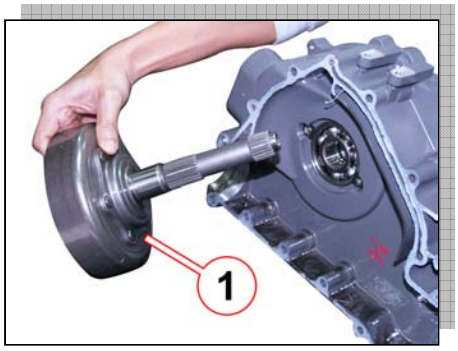

● Remove the O ring.

● Remove the clutch shoe nut.

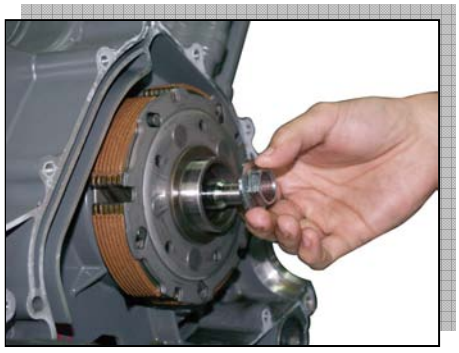

● Remove the one clutch shoe with the special tool.

● Remove the output shaft [2].

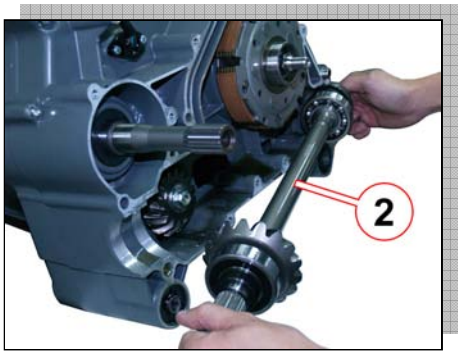

● Remove the right crank case bolts.

NOTE
Loosen the crankcase bolts diagonally with the smaller sizes first.

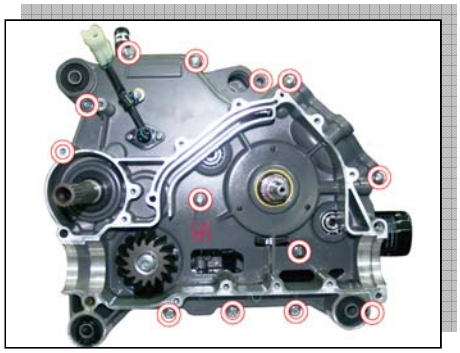

● Remove the right crank with special tool.

NOTE
* The crankcase separator plate is parallel with the end face of the crankcase. * The crankshaft must remain in the left crankcase half.

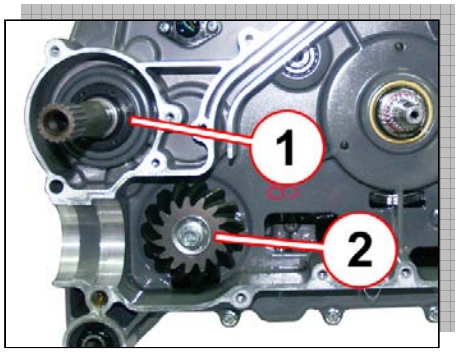

● Remove the collar [1].
● Remove the drive bevel gear [2].

● Remove the dowel pins [2].

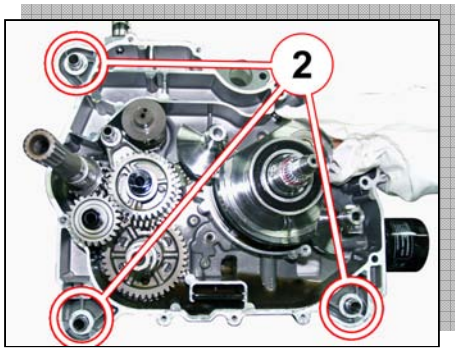

● Remove the oil sump filter [3].

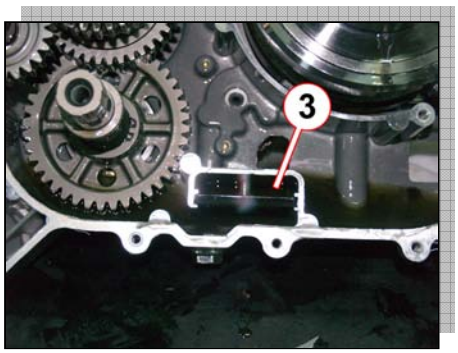

- Remove the gearshift fork shaft.
- Remove the gearshift forks [4].
- Remove the gearshift cam drum [5].
- Remove the seminal gear [6].
- Remove the countershaft assembly [7].
- Remove the input main shaft [8].
- Remove the final shaft T/M assembly [9].

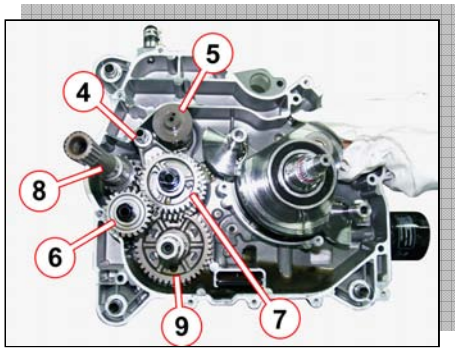

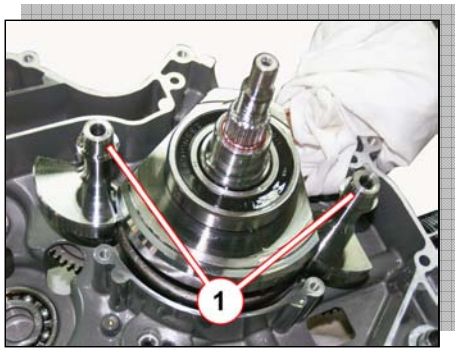

- Remove the crank balance shafts [1].

INSPECTION

CAMSHAFT AND CYLINDER HEAD

Camshaft

NOTE
Identify the original position of disassembled parts, with marking as necessary. Place them in order on the clean table. It is important that buckets are place back in original hole.

Visual Checking

- Check for ware and damage on Cam Sprocket gear teeth.
- Check for ware and damage on decompression related parts.
- Check if decompression would be operated smoothly.
- If any parts would be damaged or worn, replace with new Camshaft Assy.

Camheight

- Check for damage and ware on cam profile portion.
- Measure the height of cam profile.

Service Limit of cam profile height	
IN	36.150 mm
EX	35.100 mm

CAUTION
Do not attempt to disassemble the camshaft. It is not serviceable.

Camshaft journal wear

Determine whether or not each journal is worn down to the limit by measuring the oil clearance with the camshaft installed in place. Use the plastigauge [A] to read the clearance at the widest portion.

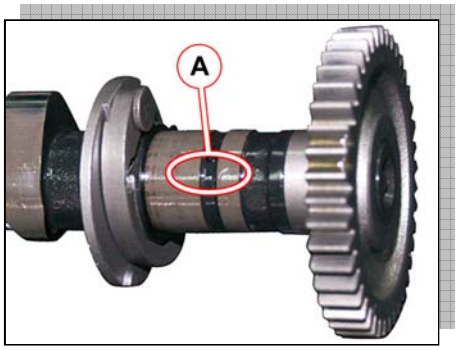

Oil clearance at cam journal portion	
Service Limit	0.150 mm

NOTE
Do not rotate the camshaft with the plastigauge in place.

ID of cam journal portion	
Standard (IN & EX)	23.000 ~ 23.021 mm

OD of Camshaft journal portion	
Standard (IN & EX)	22.980 to 22.959 mm

Clinder head

- Remove tappets [1] and shim [2].

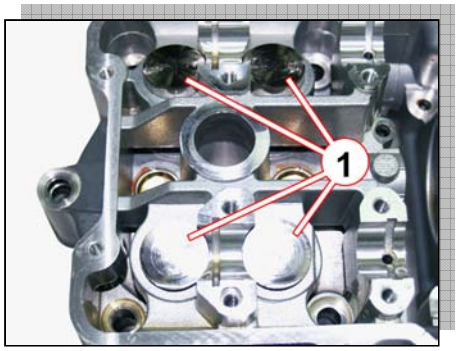

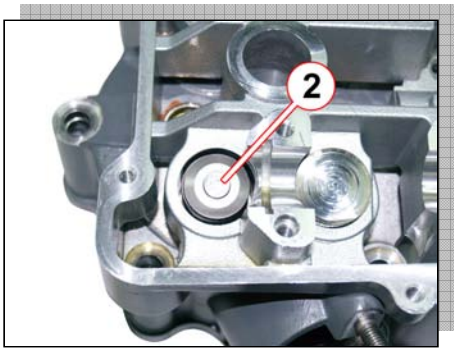

- Use special tools (Valve spring compressor), compress the Valve Spring and remove the valve keeper.
- Remove the spring retainer and valve spring.

- Pull out the valve [3] from the combustion chamber side.
- Remove oil seal and valve guide.

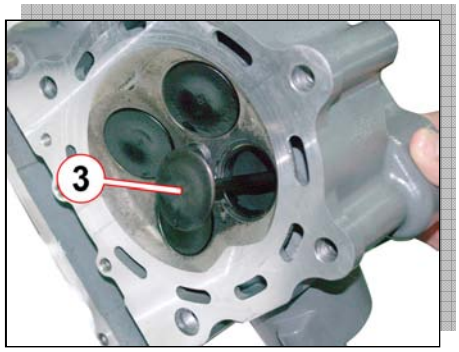

NOTE
Do not reuse the removed oil seals.

Cylinder head distortion

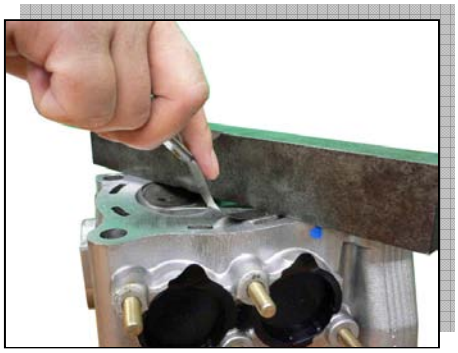

- Clean and remove carbon deposits from the surface. Never damage the surface when cleaning.
- Place straight edge on the surface, and check with thickness gauge.
- If the result is out of specifications, replace with new Cylinder Head.

Cylinder Head Distortion	
Service Limit	0.05 mm

Valve Stem runout

- Remove carbon deposits.

Place on the V-block.

- Measure the runout by means of dial gauge.
- If the result is out of specifications, replace with new Valve.

Valve Stem runout	
Service Limit	0.05 mm

Valve head radial runout

- Place the dial gauge at right angles to the valve head face, and measure the valve head radial runout.
- If it measures more than the limit, replace the valve.

Service Limit of Valve head radial runout	
IN & EX	0.03 mm

Valve face wear

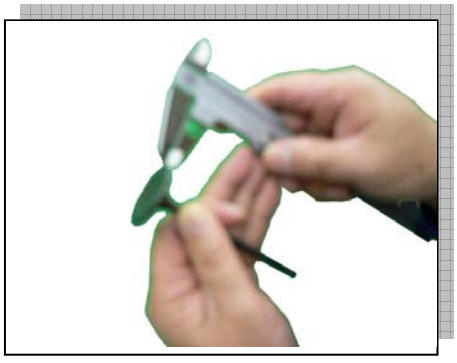

- Inspect each valve for wear of its seating face. Replace any valve with an abnormally worn face.
- Measure the thickness, and if it measures less than the limit, replace the valve.

Service Limit of Valve head thickness	
IN & EX	0.5 mm

Valve stem deflection

Lift the valve about 8mm from the valve seat. Measure the valve stem deflection in two directions, perpendicular to each other, by positioning the dial gauge.

If the deflection measured exceeds the limit, then determine whether the valve or the guide should be replaces with a new one.

Service Limit of Valve stem deflection	
IN & EX	0.35 mm

Valve stem wear

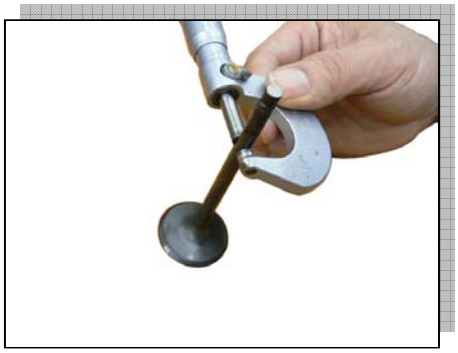

- If the valve stem is worn down to the limit, as measured with a micrometer, where the clearance is found to be in excess of the limit indicated, replace the valve; if the stem is within the limit, then replace the guide.
- Measure OD of Valve Stem sliding portion at total 6 points; upper, middle and lower positions and X- and Y-directions, by means of micrometer.

Service Limit of Valve Guide OD	
IN	5.450 to 5.465 mm
EX	5.430 to 5.445 mm

Valve Spring

- Measure the free length of Valve Spring.
- Check the force required to compress the spring.
- If the result is not correct, replace the spring.

Service Limit of Valve spring free length	
IN & EX	46.1 mm

Service Limit of Valve spring free length	
IN & EX	19.0~21.4kgf / 36.50mm

Water bypass union and oil pressure gauge

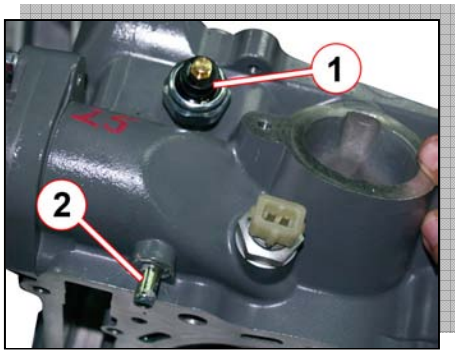

- Remove the oil pressure gauge [1] and water bypass union [2]
- Apply thread lock to the thread part of water bypass union and tighten it to the specified torque.

  Torque - Water bypass union: 14 N-m

Thermostat

- Remove the thermostat cover [1].
- Remove the thermostat.

CAM CHAIN TENSIONER

Inspection

Check the push rod slides smoothly when releasing stopper.

If it does not slide smoothly, replace the cam chain tensioner with a new one.

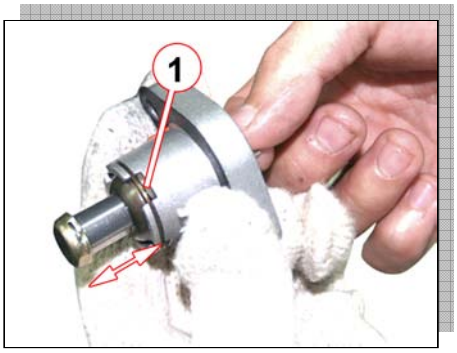

CAM CHAIN GUIDE

Inspection

Check the contacting surface of the cam chain guide for wear and damage.

If it is found to be damaged, replace it with a new one.

CYLINDER

Cylinder distortion

Check the gasketed surface of the cylinder for distortion with a straightedge and thickness gauge, taking a clearance reading at several places as indicated.

If the largest reading at every position of the straightedge exceeds the limit, replace the cylinder.

Cylinder Distortion	
Service Limit	0.05 mm

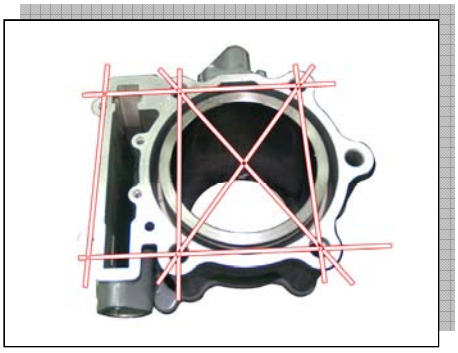

Cylinder bore

- Check for damage or ware on bore surface.
- Measure the cylinder bore at total 6 positions; top, middle and bottom positions and axial (Camshaft) and right angle directions.

Cylinder bore	
Service limit	102.000 to 102.020mm

TIMING GEAR

Timing gear adjust

- Remove the Cylinder head cover and camshaft.
- Remove the Recoil starter.
- Leave the Starter cup on the left crankcase.
- Use tool to adjust the Start cup to align the TDC line [A] with the index mark [B] of the crankcase to make the piston to the highest position.

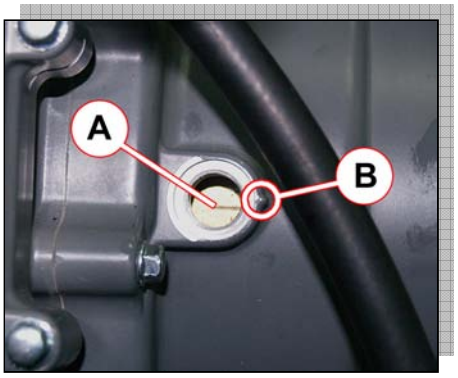

- Make the mark [C] on the Timing chain driver gear to the highest position. Meanwhile the mark on the opposite side the Timing chain driver gear is also aligned with the mark position [D].

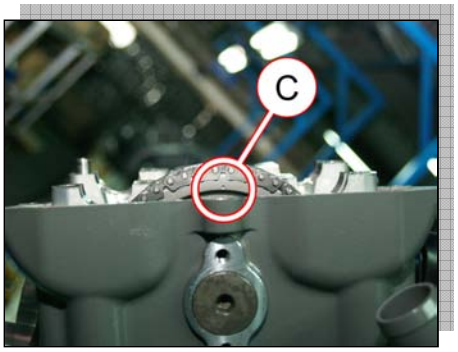

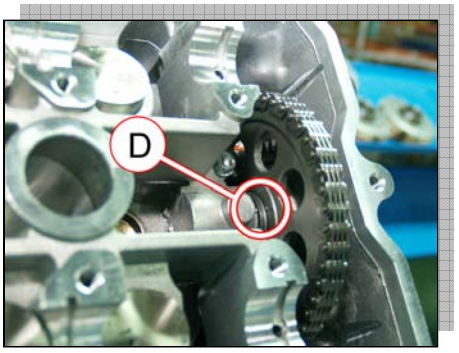

- Assemble the camshafts by aligning the engraved marks [E] with the mating surface of the cylinder head cover.

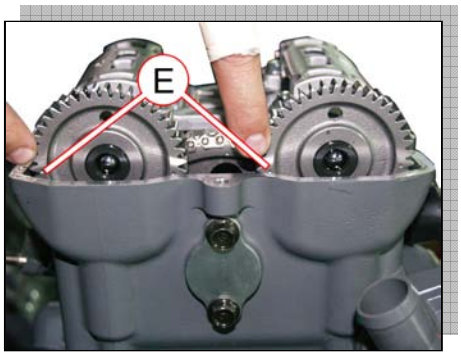

PISTON

Piston Diameter

- Check for ware and damage on the sliding surface.
- Measure OD of Piston at the position shown in the picture. If the measurement is less than the limit, replace the piston.

Piston OD	
Service limit	101.880 mm

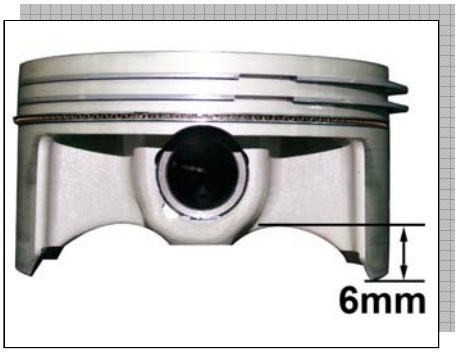

Piston Rings

Clearance between Piston Ring and groove

- Measure the clearance between Piston Ring and groove, by holding the Ring upwards in the groove, with thickness gauge.
- If any of the clearances exceeds the limit, replace both piston and piston rings.

Service Limit of clearance	
Top	0.180 mm
Second	0.150 mm

Piton ring groove width		
Standard	Top	1.21~1.23 mm
	Second	1.21~1.23 mm
	Oil	2.01~2.03 mm

Piton ring thickness		
Standard	Top	1.17~1.19 mm
	Second	1.17~1.19 mm

Piston Ring gap (Opening)

- Insert Piston Ring into the lower portion of Cylinder horizontally by using Piston.
- Measure the Piston Ring gap (opening) with thickness gauge.

Service Limit of Piston Ring gap(Opening)	
Top ring	0.50 mm
Second ring	0.50 mm

Piston pin and pin bore

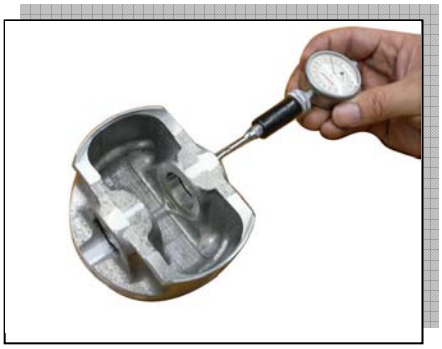

ID of Piston hole for Pin

- Clean Piston hole for Pin.
- Measure ID in the up and down direction and the right angle direction with dial caliper gauge.

ID of Piston hole for Pin	
Service limit	23.030 mm

Piston Pin OD

- Check for ware and damage on the sliding surface.
- Measure OD at total 3 positions; both ends and middle position in the X- and Y-direction.

Piston Pin OD	
Service limit	22.980 mm

CONNECTING ROD

Small end ID

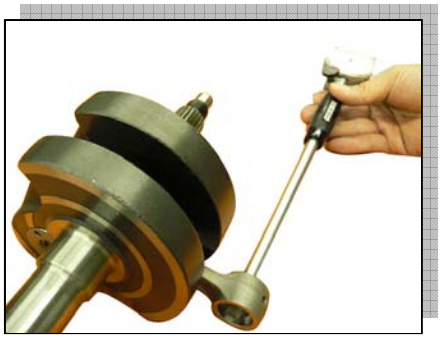

- Check for ware and damage on the sliding surface.
- Measure ID in the X- and Y-direction with caliper dial gauge.

Small end ID	
Service limit	23.040 mm

Connecting rod deflection

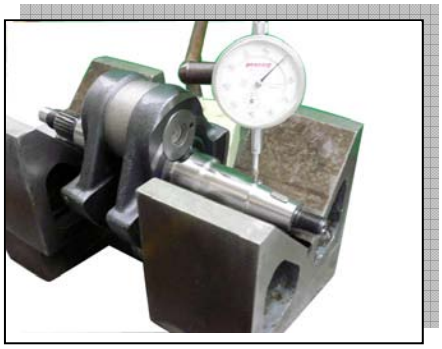

- Wear of the big end of the rod can be estimated by checking the movement of the small end of the rod.
- This method can also check the extent of wear on the rod's big end.

Connecting Rod deflection	
Service Limit	3.0 mm

Side-clearance at large end of Connecting Rod

- Measure the side-clearance at large end of Connecting Rod with thickness gauge.

Side-clearance at large end	
Service Limit	1.0 mm

Runout

- Set on the V-block and measure runout with dial gauge.

Crankshaft Runout	
Service Limit	0.08 mm

CLUTCH

Clutch Shoe

- Inspect the clutch shoe for chips, cracks, uneven wear, and heat discoloration. Also, check the depth of the grooves on the clutch shoe.
- If there is no groove at any part of the shoe, replace the shoe as a set.

NOTE
The clutch shoe must always be changed as a set.

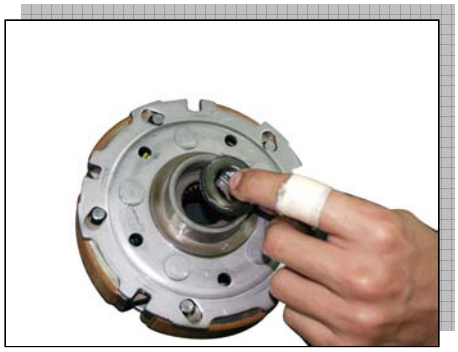

Clutch Wheel

- Inspect the condition of the inner clutch wheel surface for scuffs, scratches, cracks or uneven wear.
- If any damages are found, replace the clutch wheel with a new one.

Starter Clutch

- Remove the starter clutch securing bolts.
- Install the starter clutch in the proper direction.

NOTE
○ When installing the starter clutch onto the rotor, make sure the flange side of the one way clutch faces to the rotor. ○ Face the arrow mark to the engine side.

- Apply the engine oil to the starter clutch.
- Tighten the bolts to the specified torque.

Torque – Starter clutch bolts: 26 N-m

- Install the starter driven gear to the starter clutch.
- Check that the starter driven gear turns in the opposite direction of the arrow mark on the rotor while holding the generator motor. The gear never turns in the direction of the arrow.
- If there is anything unusual, replace the one way clutch.
- Check the starter driven gear bearing, If there is anything unusual, replacing the bearing.
- Remove the bearing with the special tool.

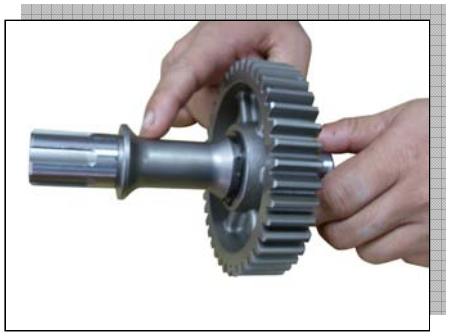

- Install the bearing with the special tool.

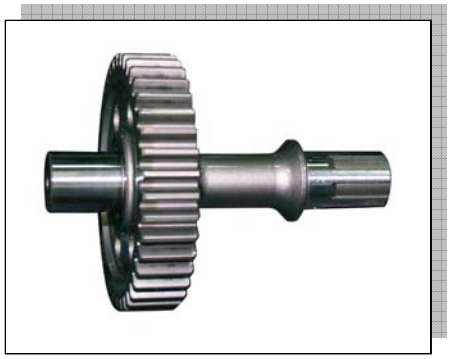

MOVABLE DRIVE FACE AND DRIVEN FACE

Movable drive face disassembly

- Remove the spacer.
- Remove the movable drive face plate and rollers.

Roller and sliding surface

- Inspect each roller and their sliding surface for wear or damage. If any damages are found, replace the rollers as a set.

NOTE
The rollers must always be changed as a set.

Oil seal

- Inspect the lip of the oil seal for wear or damage. If any damages are found, replace the oil seal with a new one.
- Remove the oil seal.

Movable and fixed drive face

- Inspect each drive faces for any abnormal conditions such as stepped wear or discoloration caused by burning. If any damages are found, replace the drive faces with new ones.
- Install the oil seal with the special tool.

Reassembly

- Reassemble the movable and fixed drive face in the reverse order of disassembly.
- Apply a small amount of grease to the bore and oil seal lip.

CAUTION
Wipe off any excess grease thoroughly. Take care not to apply grease to the contact surface of the drive belt.

- Position the eight rollers on the movable drive face.
- Mount on the dampers on the movable drive face plate.
- Position the movable drive face plate on the movable drive face.
- Install the spacer.

NOTE
When inserting the spacer, press down the movable drive face plate so as not to cause the rollers to come out of position.

Movable driven face disassembly

- Hold the movable driven face assembly with the special tools and vise, loosen the movable driven face ring nut with the special tools.

⚠WARNING
Do not remove the movable driven face ring nut before attaching the clutch spring compressor.

- Attach the special tool to the movable driven face assembly and compress the movable driven face assembly by turning in the special tool handle.

NOTE
Make sure to insert the spring end into the slot of the special tool.

- Remove the movable driven face ring nut.

⚠WARNING
Since a high spring force applies to the movable driven face, care must be used so as not to cause the movable driven face to come off abruptly.

- Loosen the special tool handle slowly and remove the special tool.
- Remove the spring plate and spring.
- Remove the spring seat.
- Remove the pins and rollers.
- Remove the driven face.

Oil seal

- Inspect the lip of the oil seal for wear or damage. If any damages are found, replace the oil seal with a new one.
- Remove the oil seal.
- Install the oil seal with the special tool.

Movable driven face spring

- Measure the spring free length with the vernier caliper.
- If the length is shorter than the service limit, replace the spring with a new one.

Movable driven face spring free length	
Service Limit	155 mm

Movable and fixed driven face

- Inspect the driven faces for any abnormal conditions such as stepped wear or discoloration caused by burning. If any damages are found, replace the movable driven face with a new one.

Reassembly

- Install the new O-rings.
- Apply grease to the oil seal lips and movable driven face inside grease groove.
- Apply grease to the O-rings and pin grooves.
- Install the rollers and pins.

CAUTION
To prevent damaging the oil seal lip from during installation, slide the lip using a 0.1 mm steel sheet as a guide.

- Install the spring seat by aligning the holes.
- Install the spring and the spring plate by aligning the spring ends with the holes.
- Compress the spring with the special tool.
- Tighten the movable driven face ring nut temporarily.
- Remove the special tool from the movable driven face assembly.
- Tighten the movable driven face ring nut to the specified torque with the special tool.

Torque – Movable driven face ring nut: 110 N-m

DRIVE BELT

Inspection

- Check that the drive belt is free from any greasy substance.
- Inspect the contact surface of the drive belt for cracks or damage and measure the width of the drive belt using the vernier calipers.
- If any damages are found or the measurement exceeds the service limit, replace the drive belt with a new one.

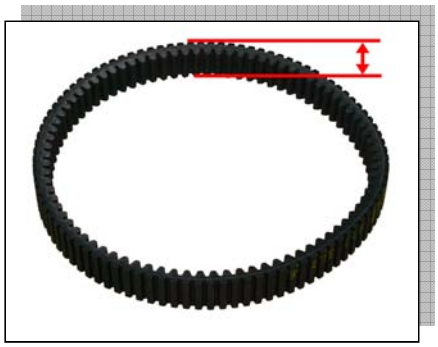

Drive belt width	
Service Limit	33.3 mm

CAUTION
If grease or oil is present on the surface of the drive belt, degrease the belt thoroughy.

Oil Pump

- Rotate the oil pump by hand and check that it moves smoothly.
- If it does not move smoothly, replace the oil pump assembly.

CAUTION
Do not attempt to disassembly the oil pump assembly. The oil pump is available only as an assembly.

TRANSMISSION

Visual checking – Shift Fork and Drum

- Check for ware and damage.
- If any ware on the Fork craw portion, replace with new one.

Visual checking – Main Shaft and Counter Shaft Assy.

- After disassembling, check for ware and damage on dug clutch portion, gears and spline portions.
- If any ware and damage, replace with new one.

Width of Shift Fork groove

- Check for ware and scratch in the Fork groove.
- Measure the width of Shift Fork groove with caliper gauge.

Width of Shift Fork groove		
Standard	Reverse	5.60 to 5.67 mm
	High	5.60 to 5.67 mm

Thickness of Shift Fork craw

- Measure the thickness of Shift Fork craw with micrometer.

Thickness of Shift Fork craw		
Standard	Reverse	5.40 to 5.50 mm
	High	5.40 to 5.50 mm

REASSEMBLY

Please reverse the disassembly steps to reassembly.

ELECTRICAL SYSTEM

Table of Contents

Specifications----------7-2
Parts Location----------7-3
Precautions----------7-5
Electrical Wiring----------7-6
Wiring Inspection----------7-6
Battery----------7-7
Battery Charging----------7-7
Charging Procedures----------7-8
Battery Test Charging----------7-8
Regulator/Rectifier Output Voltage Inspection----------7-9
Alternator Inspection----------7-10
CDI Output Test----------7-10
Ignition System----------7-11
Spark Plug Removal/Installation----------7-11
Spark Plug Cleaning/Inspection----------7-11
Spark Plug Gap----------7-11
Ignition Coil Removal----------7-11
Ignition Coil Installation----------7-12
Ignition Coil Inspection----------7-12
Ignition Timing Test----------7-13
CDI Unit Inspection----------7-13
Lighting System----------7-14
Headlight Bulb Replacement----------7-14
Taillight Bulb Replacement----------7-14
Indicator Bulb Replacement----------7-14
Rear-View Mirror Replacement----------7-15
Neutral Light Bulb Replacement----------7-15
Fuses----------7-15
Main Fuse Removal----------7-15
Fuse Inspection----------7-15
Wiring Diagram----------7-16

Specifications

Item			Standard
Battery Capacity			12 V ; 18A/h
Alternator type			Three-phase AC
Charging voltage (Regulator/rectifier output)			14~15 V
Alternator output voltage			DC14V-23A @ 3000 rpm
Stator	Charge Coil	Y1-Y2	0.52 Ω
		Y2-Y/R	0.49 Ω
		Y/R-Y1	0.49 Ω
		Y-Ground	∞
	Pulser Coil	W/R-W	110 Ω
		W-Grnd	
Ignition Coil		Primary	0.3 Ω
		Secondary	6.3 kΩ
Spark plug		Gap	0.8~0.9 mm
		Cap resistance	5 kΩ
Starter motor		Nominal Output	0.7 kW
		Reduction Ratio	28.235

Parts Location

High/Low Beam Switch [A]
Hazard Lights Switch [B]
Horn Switch [C]
Indicator Switch [D]

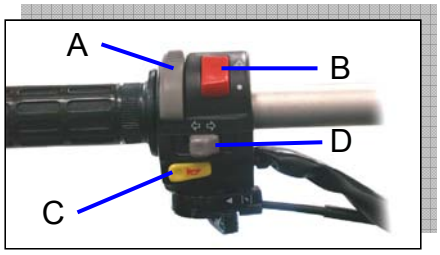

Ignition Switch [E]

Starter Button [F]

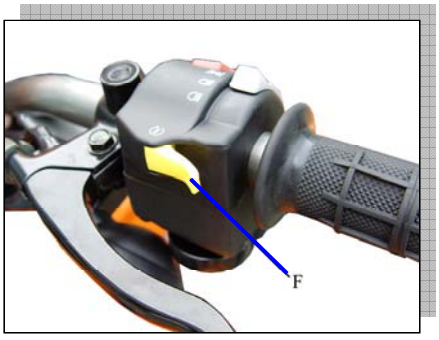

Battery [A]
Starter Circuit Relay [B]
CDI Unit [C]
Indicator Relay [D]
Position Light Relay [E]
Ignition Coil [F]
Spark Plug [G]

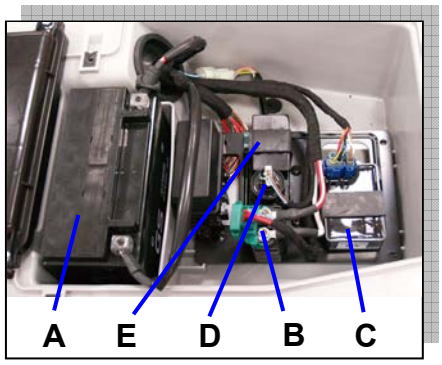

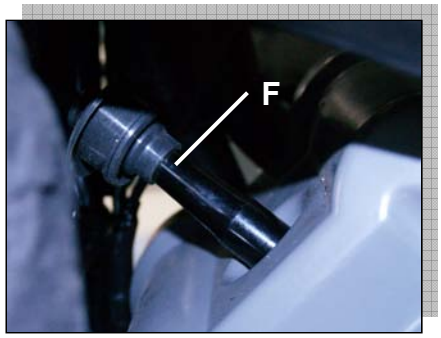

Regulator/Rectifier [H]

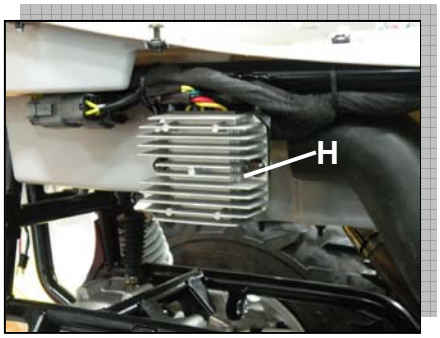

Magneto CP [A]
Starter Motor [B]

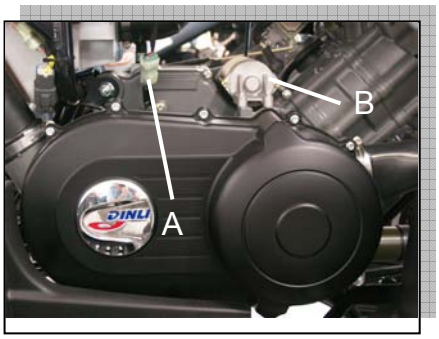

Horn [C]

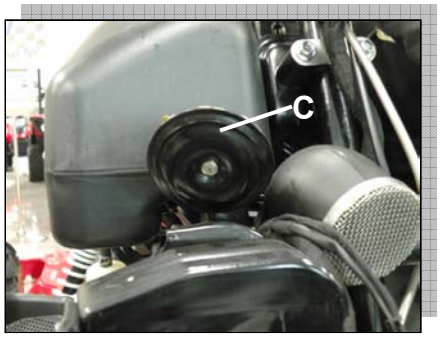

Temperature Sensor[D]

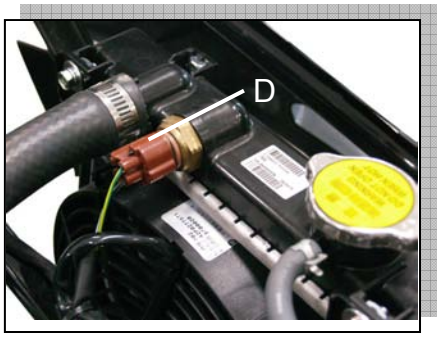

Precautions

There are a number of important precautions that are musts when servicing electrical systems. Learn and observe all the rules below.

○ Do not reverse the battery lead connections. This will burn out the diodes in the electrical parts.

○ Always check battery condition before condemning other parts of an electrical system. A fully charged battery is a must for conducting accurate electrical system tests.

○ The electrical parts should never be struck sharply, as with a hammer, or allowed to fall on a hard surface. Such a shock to the parts can damage them.

○ To prevent damage to electrical parts, do not disconnect the battery leads or any other electrical connections when the ignition switch is on, or while the engine is running.

○ Because of the large amount of current, never keep the starter button pushed when the starter motor will not turn over, or the current may burn out the starter motor windings.

○ Do not use a illumination bulb rated for other than the voltage or wattage specified in the wiring diagram, as the handle cover could be warped by excessive heat radiated from the bulb.

CAUTION
Take care not to short the leads that are directly connected to the battery positive (+) terminal to the chassis ground.

○ Troubles may involve one or in some cases all items. Never replace a defective part without determining what CAUSED the failure. If the failure was caused by some other item or items, they too must be repaired or replaced, or the new replacement will soon fail again.

○ Make sure all connectors in the circuit are clean and tight, and examine wires for signs of burning, fraying, etc. poor wires and bad connections will affect electrical system operation.

○ Measure coil and winding resistance when the part is cold (at room temperature).

○ Color codes:

B	Black	G	Green	P	Pink
BU	Blue	GY	Gray	PU	Purple
BR	Brown	LB	Light blue	R	Red
CH	Chocolate	LG	Light green	W	White
DG	Dark green	O	Orange	Y	Yellow

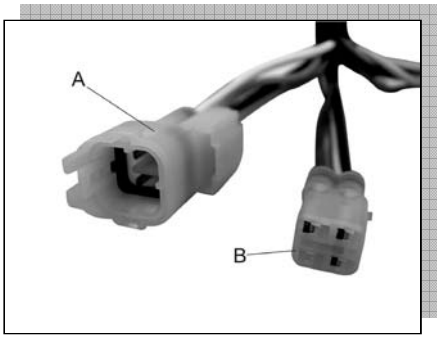

○ Electrical Connectors:
Female Connectors [A]
Male Connectors [B]

Electrical Wiring

Wiring Inspection

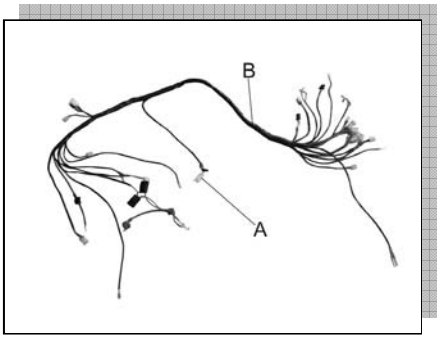

● Visually inspect the wiring for signs of burning, fraying, etc.

□ If any wiring is poor, replace the damaged wiring.

● Pull each connector [A] apart and inspect it for corrosion, dirt, and damage.

□ If the connector is corroded or dirty, clean it carefully. If it is damaged, replace it.

● Check the wiring for continuity.

○ Use the wiring diagram to find the ends of the lead which is suspected of being a problem.

○ Connect the hand tester between the ends of the leads.

○ Set the tester to the x 1 Ω range, and read the tester.

□ If the tester does not read 0 Ω the lead is defective. Replace the lead or the wiring harness [B] if necessary.

Battery

Battery Removal

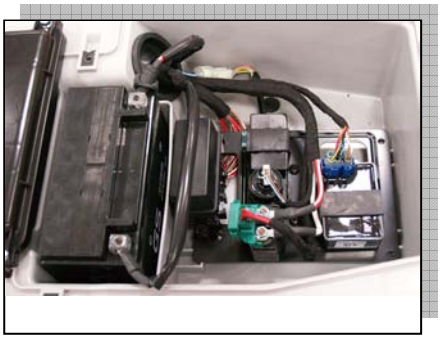

● Disconnect the battery negative (-) cable [Black] first and then the positive (+) cable [red].

● Take out the battery.

Battery Installation

● Connect the positive cable first and then the negative cable.

Battery Charging

⚠ WARNING
Keep the battery away from sparks and open flames during charging, since the battery gives off an explosive gas mixture of hydrogen and oxygen. When using a battery charger, connect the battery to the charger before turning on the charger. This procedure prevents sparks at the battery terminals, which could ignite any battery gases.

The battery is a maintenance-free design and construction. Use of conventional lead-acid batteries is not recommended. No electrolyte or refilling water is required. Because this battery is a completely sealed type, abuse of the battery can cause an explosion.

Please adhere to the following points:

1. Follow the instructions shown on battery package for preparation and filling with battery electrolyte.
2. Never interfere with the sealed state of the battery.

3. Check the charging conditions with a voltmeter (Normal charging voltage should be 12.8V)
4. This battery may be installed only if replaces a similar sealed type battery.
5. Keep away from high temperature of fire.
6. In the case of an accident sulfuric acid may escape. Avoid contact with skin, eyes or clothing.

Charging Method

Normal Charge: 1.8A 5~10 hrs
Fast Charge : 18A 0.5 hrs

New Battery:

Use of conventional lead-acid batteries is not recommended.

Battery type: GS, GTX20L-BS

CAUTION
NEVER attempt to add electrolyte or water to the maintenance-free design and construction. Doing so will damage the case and shorten the life of the battery.

Charging Procedure

- Remove the battery (see Battery Removal).
- Connect a charger to the battery BEFORE plugging it in or turning it on.
- Set the charging rate and time according to the battery condition previously determined

CAUTION
Always remove the battery from the vehicle for charging. Do not use a high rate battery charger, as is typically employed at automotive service stations, unless the charger rate can be reduced to the level required. Charging the battery at a rate higher than specified may ruin the battery. Charging at a high rate causes excess heat, which can warp the plates and cause internal shorting. Higher-than-normal charging rates also cause the plates to shed active material. Deposits will accumulate, and can cause internal shorting.

- Turn the charger off or unplug it, then disconnect it from the battery.
- Check battery condition.

□ If the battery condition indicates that is not fully charged, additional charging time is necessary.

Battery Test Charging

- If the battery is suspected of being defective, sulfated, or unable to take a charge, consult the table.
- To test charge a battery, perform the ordinary charging procedure and monitor the battery voltage and other signs as mentioned below.

□ If the battery voltage suddenly jumps to over 13 V just after the start of charging, the plates are probably sulfated. A good battery will rise to 12 V immediately and then gradually go up to 12.5 or13 V in about 30 min. to an hour after the start of charging.

- If there does not appear to be enough sediment in a cell to short the plates, but that cell has a very low specific gravity after the battery is fully charged, the trouble may be that there is not enough acid in that one cell. In this case only, sulfuric acid solution may be added to correct the specific gravity.

□ If a fully charged battery doesn't lose its charge after 2 to 7 days; or if the specific gravity drops markedly, the battery is defective. The self-discharge rate of a good battery is only about 1% per day.

Regulator / Rectifier Output Voltage Inspection

- Check the battery condition (see Battery section)
- Warm up the engine to obtain actual alternator operating conditions.
- Check that the ignition switch is turned off, and connect the hand tester to the battery terminal.
- Start the engine, and note the voltage readings at various engines speeds with the headlight turned on and then turned off. The readings should show nearly battery voltage when the engine speed is low, and as the engine speed rises, the readings should also rise. But they must be kept under the specified voltage.

Regulator/ Rectifier Output Voltage

Tester Range	Connections		Reading
	Tester (+) to	Tester (-) to	
25 V DC	Battery (+)	Battery (-)	14 ~ 15 V

- Turn off the ignition switch to stop the engine, and disconnect the hand tester.

◎ If the regulator/rectifier output voltage is kept between the values given in the table, the charging system is considered to be working normally.

◎ If the output voltage is much higher than the values specified in the table, the regulator/rectifier is defective or the regulator /rectifier leads are loose or open.

◎ If the battery voltage does not rise as the engine speed increases, then the regulator/rectified is defective or the alternator output is insufficient for the loads, check the alternator and regulator/rectifier to determine which part is defective.

Alternator Inspection

There are three types of alternator failures: short, open (wire burned out), or loss in rotor magnetism. A short or open in one of the coil wires will result in either a low output, or no output at all. A loss in rotor magnetism, which may be caused by dropping or hitting the alternator, by leaving it near an electromagnetic field or just by it again, will result in low output.

● To check the alternator output voltage, do the following procedures.

○ Disconnect the alternator connector

○ Connect the hand tester. **(+) to red/white; (-) to white**

○ Start the engine.

○ Run it at the rpm.

○ Note the voltage readings (total 3 measurements).

Alternator Output Voltage:

Minimum of 5 AC Amps at Idle

CDI Output Test: (Using Peak Reading Adaptor)

Connect all CDI wires to stator wires. Disconnect CDI module wire from ignition coil primary terminal. Connect one lead to engine ground and the other to the ignition coil primary wire leading from the CDI module. Set meter to read DC Volts. Crank engine and check output of CDI wire to coil.

Reconnect CDI wire to coil.

Average Output w/Digital Voltmeter with or without Peak Reader:

200~400 DCV

Ignition System

⚠ WARNING
The ignition system produces extremely high voltage. Do not touch the spark plug, ignition coil, or spark plug lead while the engine is running, or you could receive a severe electrical shock.

CAUTION
Do not disconnect the battery leads or any other electrical connections when the ignition switch is on, or while the engine is running. This is to prevent CDI unit damage. Do not install the battery backwards. The negative side is grounded. This is to prevent damage to the diodes and CDI unit. Use the standard regulator/rectifier, or the CDI unit will be damaged.

Spark Plug Removal/Installation

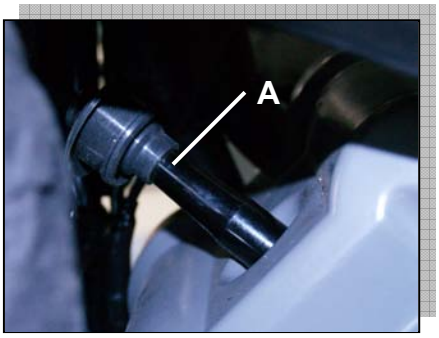

- Remove Ignition Coil [A]
- Remove or install the spark plug [B] using the spark plug wrench from the vehicle right side.

Torque - Spark Plug: 14 N-m (1.4 kgf-m, 10.0 ft-lb)

Spark Plug Cleaning/ Inspection

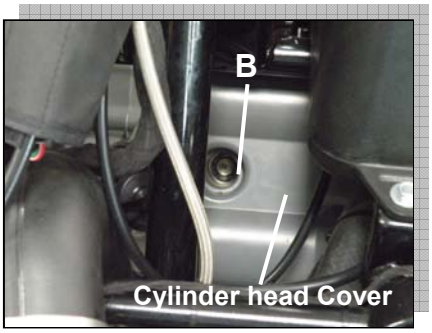

- Clean the spark plug, preferably in a sandblasting device, and then clean off any abrasive particles. The plug may also be cleaned using a high flash-point solvent and a wire brush or other suitable tool. If the spark plug electrodes are corroded or damaged, or if the insulator is cracked, replace the plug. Use the standard spark plug or its equivalent.

Spark Plug Gap

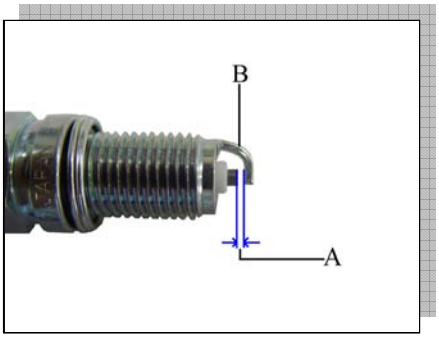

- Measure the gap [A] with a wire-type thickness gauge.
- If the gap is incorrect, carefully bend the side electrode [B] with a suitable tool to obtain the correct gap.

Spark Plug Gap 0.8 ~ 0.9 mm

Ignition Coil Removal

- Pull out the coil off cylinder.
- Remove the bolt [A]×2.

Ignition Coil Installation

- Connect the primary winding leads to the ignition coil terminals

Ignition Coil Inspection

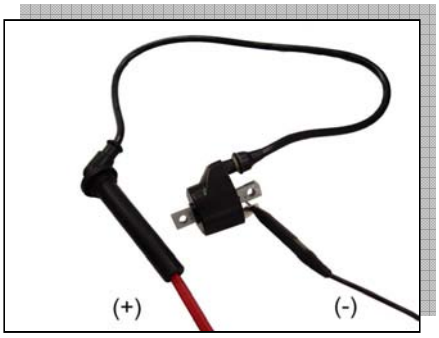

- Remove the ignition coil.
- Measure the primary winding resistance as follows:
  - ○ Connect the tester between the coil terminals.
  - ○ Set the tester to the × 1Ω range, and read the tester.
- Measure the secondary winding resistance as follows:

○ Remove the plug cap by turning it counterclockwise.

○ Connect the tester between the spark plug lead and terminal.

○ Set the tester to the × 1 kΩ range, and read the tester.

◎ If the hand tester does not read as specified, replace the coil.

○ To install the plug cap, turn it clockwise.

CDI Unit Inspection

CAUTION
When inspecting the CDI unit, observe the following to avoid damage to the CDI unit. Do not disconnect the CDI unit with the ignition switch on. This may damage the CDI unit. Do not disconnect the battery leads while the engine is running. This may damage the CDI unit.

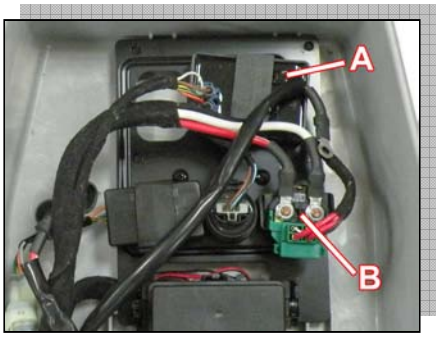

● Remove the seat (see Frame chapter).

● Remove the CDI unit [A] and disconnect the connectors [C].

● Set the hand tester to the × 1kΩ range and make the measurements shown in the table.

◎ If the tester readings are not as specified, replace the CDI unit.

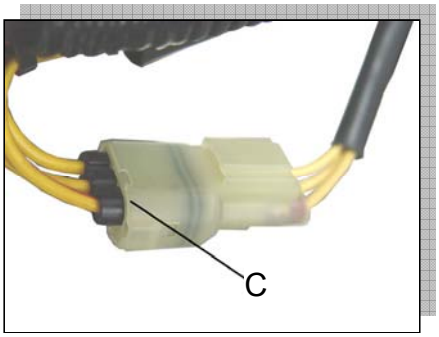

Starter Relay Inspection

● Remove:

Seat (see Frame chapter)

Starter Relay [B]

● Connect the hand tester and 12V battery to the starter relay as shown.

● If the relay does not work as specified, the relay is defective, replace the relay.

Testing Relay

Hand Tester Range: x 1Ω range

Criteria: When battery is connected◎0Ω

When battery is disconnected◎∞Ω

Lighting System

Headlight Bulb Replacement

● Remove:

Headlight Unit. (See Frame Removal Chapter)

Bulb Holder

● Slide back the dust protection, and remove the bulb from the headlight unit.

○ Turn the holder counterclockwise and pull it out.

- Be sure the socket is clean.
- Insert the new bulb by aligning the tang with the notch in the headlight unit.
- Push the holder in, turn it clockwise, and release it, it should lock in position.
- Fit the dust cover completely.

Taillight Bulb Replacement

- Remove:
  Taillight Bracket Screw *3 [A]
  Taillight Unit
- Insert the new bulb

Indicator Bulb Replacement

- Remove:
  Indicator Screw [B]
- Insert the new bulb

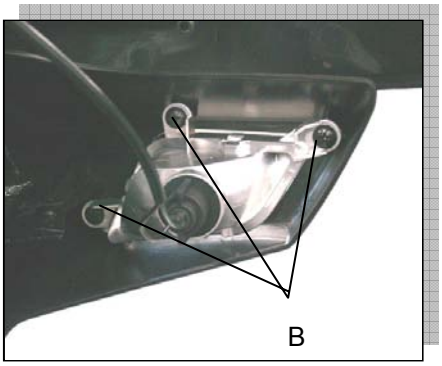

Neutral Light Bulb Replacement

- Please refer the Headlight Bulb Replacement

FUSES

Main Fuse Removal

- Remove the seat (see Frame chapter)
- Remove the fuse case cap [A] and take out the fuse [B].

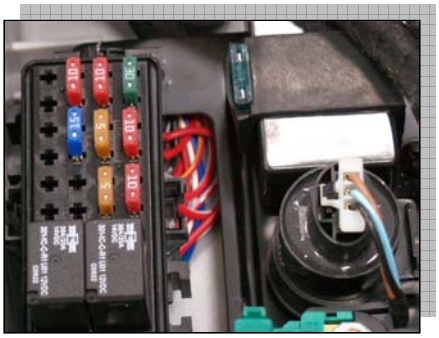

Fuse Inspection

- Inspect the fuse element.

◎ If it is blown out, replace the fuse. Before replacing a blow fuse, always check the amperage in the affected circuit. If the amperage is equal to or greater than the fuse rating, check the wiring and related components for a short circuit.

CAUTION
When replacing a fuse, be sure the new fuse matches the specified fuse rating for that circuit. Installation of a fuse with a higher rating may cause damage to wiring and components.

Wiring Diagram

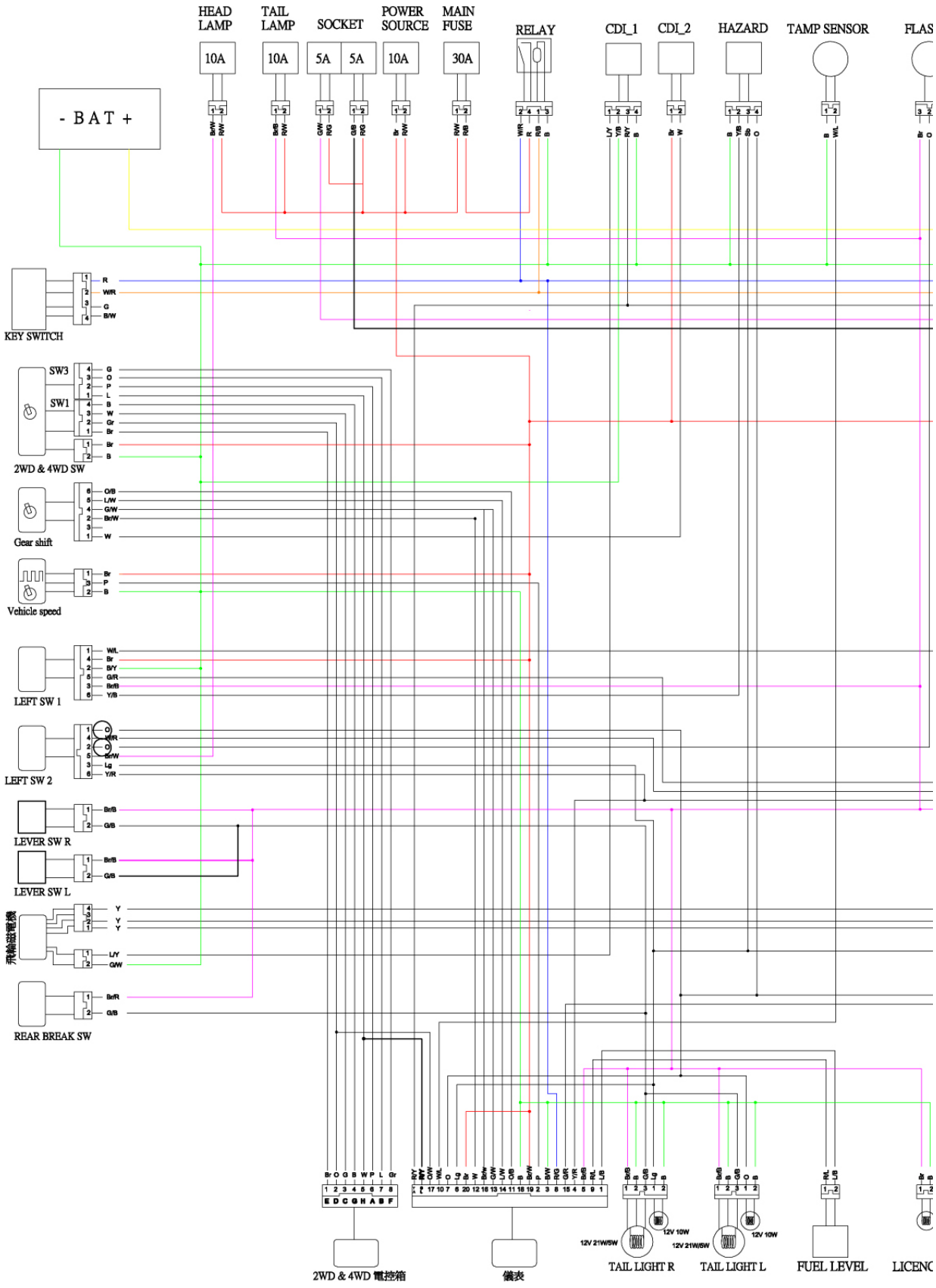

Wiring Diagram

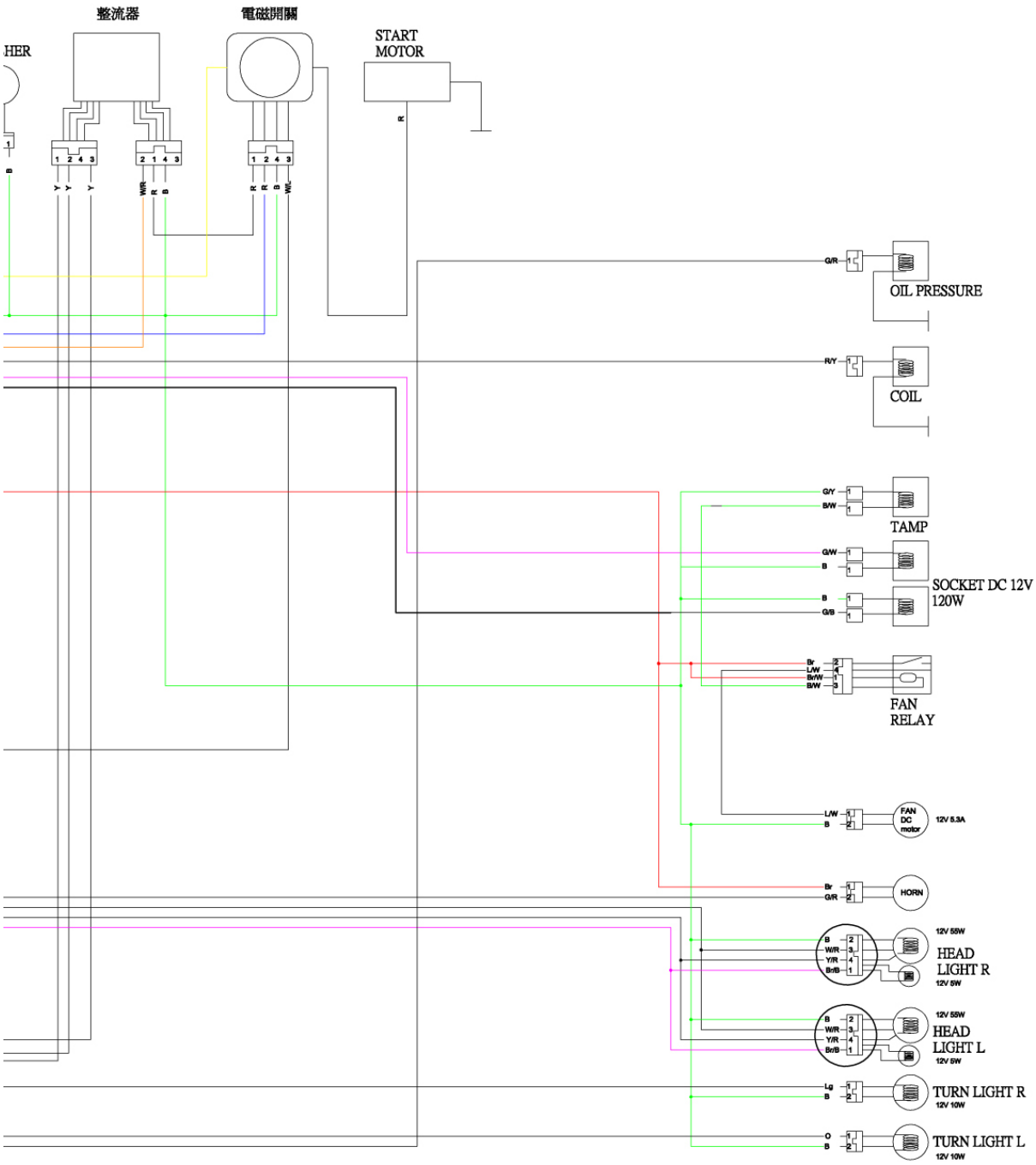

E LAMP

NOTE:

Appendix

Table of Contents

Considerations for Various Riding Conditions----------8-2
Carburetor----------8-2
Fuel System----------8-3
Spark Plug----------8-4
Clutch Adjustment----------8-6
Troubleshooting Guide----------8-7

Considerations for Various Riding Conditions

This vehicle has been designed and manufactured to operate under a wide range of riding conditions. However, it is not feasible to anticipate all of the conditions under which this vehicle might be used. Extremes of temperature, altitude, and riding usage may make changing some carburetor parts pr the spark plug desirable to maintain the vehicle in peak operating condition.

Carburetor:

Some an alteration may be desirable for good performance under different riding conditions when proper mixture is not obtained after the carburetor has been adjusted, and all parts cleaned and found to be functioning properly.

If the engine still exhibits symptoms of overly rich or lean carburetion after all maintenance and adjustments are correctly performed, the main jet can be replaced with a smaller or larger one. A smaller numbered jet gives a leaner mixture and a larger numbered jet a richer mixture.

Carburetor Pilot Screw Adjustment:

NOTE
Pilot screw is covered by a welsh plug. Plug removal will be required to perform these procedures.

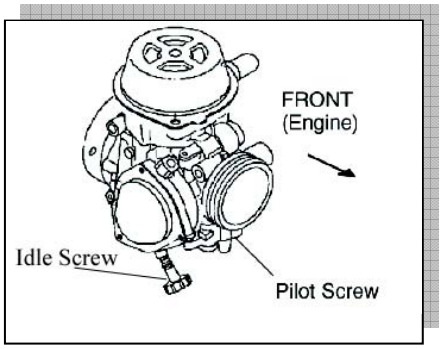

- Start engine and warm it up to operating temperature (about 10 minutes).
- With engine off, turn pilot screw in (clockwise) until lightly seated.

NOTE
Do not tighten the pilot screw forcefully against the seat or the screw and/or seat will be permanently damaged.

- Connect an accurate tachometer that will read in increments of + or – 50 RPM. Start engine.
- Set idle speed to 1600 RPM.

NOTE
Always Check throttle cable freeplay after adjusting idle speed and adjust if necessary.

- Slowly turn mixture screw clockwise using the pilot screw wrench until engine begins to miss.
- Slowly turn mixture screw counterclockwise until idle speed increases to maximum RPM. Continue turning counterclockwise until idle RPM begins to drop.
- Center the pilot screw between the points in Step 5 and 6.
- Readjust idle speed to specification.

Idle Speed Adjustment

● Start engine and warm it up thoroughly.

● Adjust idle speed by turning the idle adjustment screw in (clockwise) to increase or out (counterclockwise) to decrease RPM.

NOTE
Adjusting the idle speed affects throttle cable freeplay and electronic throttle control (ETC) adjustment. Always check throttle cable freeplay after adjusting idle speed and adjust if necessary.

Idle Speed: 1300 +/- 100 RPM

Fuel System

⚠WARNING
Gasoline is extremely flammable and explosive under certain conditions.

- Always stop the engine and refuel outdoors or in a well ventilated area.
- Do not smoke or allow open lames or sparks in/near the area where refueling is performed or where gasoline is stored.
- Do not overfill the tank. Do not fill the tank neck.
- If you get gasoline in your eyes of if you swallow gasoline, seek medical attention immediately.
- If you spill gasoline on your skin or clothing, immediately wash it off with soap and water and change clothing.
- Never start the engine or let it run in an enclosed area. Engine exhaust fumes are poisonous and can result loss of consciousness or death in a short time.
- Never drain the float bowl when the engine is hot. Severe burns may result.

Fuel Lines

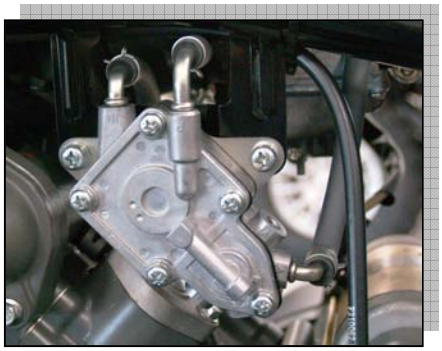

● Check fuel lines for signs of wear, deterioration, damage or leakage. Replace if necessary.

● Be sure fuel lines are routed properly and secured with cable ties.

CAUTION
Make sure lines are not kinked or pinched.

● Replace all fuel lines every two years.

Spark Plug:

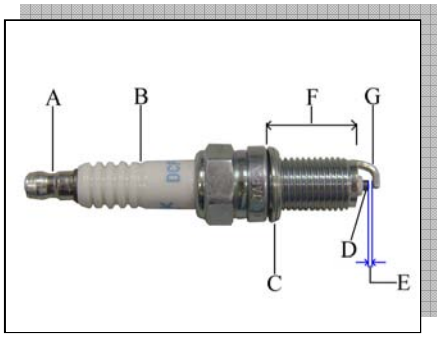

The spark plug ignites the fuel and air mixture in the combustion chamber. To do this effectively and at the proper time, the correct spark plug must be kept clean and the gap adjusted.

Tests have shown the plug listed in the General Information chapter to be the best plug for general use.

Since spark plug requirements change with the ignition and carburetion adjustments and with riding conditions, whether or not a spark plug of the correct heat range is used should be determined by removing and inspecting the plug.

Terminal [A] Insulator [B]

Gasket [C] Center Electrode [D]

Gap [E] (0.8~0.9 mm) Reach [F]

Side Electrode [G]

When a plug of the correct heat range is being used, the electrodes will stay hot enough to keep all the carbon burned off, but cool enough to keep from damaging the engine and the plug itself. This temperature is about 400 ~ 800 °C(750 ~ 1,450 °F) and can be judged by noting the condition and color of the ceramic insulator around the center electrode.

If the ceramic is clean and of a light of a light brown color, the plug is operating at the right temperature.

A spark plug for higher operating temperatures sometimes may be needed for severe conditions, such as continuous high-speed riding, or towing heavy loads. Such a plug is designed for better cooling efficiency so that it will not overheat and thus is often called a “colder” plug. If a spark plug with a heat range is used – that is, a “cold” plug that cools itself too well, - the plug will stay too cool to burn off the carbon, and the carbon will collect on the electrodes and the ceramic insulator.

The carbon on the electrodes conducts electricity, and can short the center electrode to ground by either coating the ceramic insulator or bring across the gap. Such a short will prevent an effective spark. Carbon build-up on the plug can also cause other troubles. It can heat up red-hot and cause pre-ignition and knocking, which may eventually burn a hole in the top of the piston.

Spark Plug Inspection

● Remove the spark plug and inspect the ceramic insulator.

 Whether or not the right temperature plug is being used can be ascertained by noting the condition of the ceramic insulator around the electrode. A light brown color indicates the correct plug is being used. If the ceramic is black, it indicates that the plug is firing at too low a temperature, so the next hotter type should be used instead. If the ceramic is white, the plug is operating at too high a temperature and it should be replaced with the next colder type.

CAUTION
If the spark plug is replaced with a type other than the standard plug, make certain the replacement plug has the same thread pitch and reach (length of threaded portion) and the same insulator type (regular type or projected type) as the standard plug. If the plug reach is too short, carbon will build up on the plug hole threads in the cylinder head, causing overheating and marking it very difficult to insert the correct spark plug later. If the reach is too long, carbon will build up on the exposed spark plug threads causing overheating, pre ignition, and possibly burning a hole in the piston top. In addition, it may be impossible to remove the plug without damaging the cylinder head.

CAUTION
The heat range of the spark plug functions like a thermostat for the engine. Using the wrong type of spark plug can make the engine run too hot (resulting in engine damage) or too cold (with poor performance, misfiring, and stalling).

Troubleshooting Guide

CAUTION
This is not an exhaustive list, giving every possible cause for each problem listed. It is meant simply as a rough guide to assist the troubleshooting for some of the more common difficulties.

Engine Doesn't Start, Starting Difficulty:

Starter motor not rotating:
- Neutral switch trouble
- Starter motor trouble
- Battery voltage low
- Relays not contacting or operating
- Starter button not contacting
- Wiring open or shorted
- Ignition switch trouble
- Engine stop switch trouble
- Fuse blown

Starter motor rotating but engine doesn't turn over:
- Starter motor clutch trouble

Recoil starter not operating
- Recoil starter spring broken
- Recoil starter pawl not engaging

Engine won't turn over:
- Valve seizure
- Rocker arm seizure
- Cylinder, piston seizure
- Crankshaft seizure
- Connecting rod small end seizure
- Connecting rod big end seizure
- Transmission gear or bearing seizure
- Camshaft seizure
- Balancer bearing seizure

No fuel flow:
- Fuel tank air vent obstructed
- Fuel tap clogged
- Fuel line clogged
- Float valve clogged

Engine flooded:
- Fuel level too high
- Float valve worn or stuck open
- Starting technique faulty
  (when flooded, crank the engine with the throttle fully opened to allow more air to reach the engine.)

Fuel/air mixture incorrect:
- Pilot screw and/or idle adjusting screw maladjusted
- Pilot jet, or air passage clogged
- Air cleaner clogged, poorly sealed, or missing
- Starter jet clogged.

No spark; spark weak:
- Spark plug dirty, broken, or maladjusted
- Spark plug cap or spark plug lead trouble
- Spark plug cap not in good contact
- Spark plug incorrect
- Pickup coil trouble
- CDI unit trouble
- Ignition coil trouble
- Battery voltage low
- Ignition or engine stop switch shorted
- Wiring shorted or open
- Fuse blown

Compression Low:
- Spark plug loose
- Cylinder head not sufficiently tightened down
- No valve clearance
- Cylinder, piston worn
- Piston ring bad (worn, weak, broken, or sticking)
- Piston ring/groove clearance excessive
- Cylinder head gasket damaged
- Cylinder head warped
- Valve spring broken or weak
- Valve not seating properly (valve bent, worn, or carbon accumulation on the seating surface)

Poor Running at Low Speed:

Spark weak:
- Spark plug dirty, broken, or maladjusted
- Spark plug cap or Spark plug lead trouble.
- Spark plug cap shorted or not in good contact
- Spark plug incorrect
- CDI unit trouble
- Pickup coil trouble
- Ignition coil trouble
- Battery voltage low

Fuel/air mixture incorrect:
- Pilot screw and/or idle adjusting screw maladjusted
- Pilot jet, or air passage clogged
- Starter plunger stuck open
- Air cleaner clogged, poorly sealed, or missing
- Fuel level too high or too low
- Fuel tank air vent obstructed
- Carburetor holder loose
- Air cleaner duct loose

Compression low:
- Spark plug loose
- Cylinder head not sufficiently tightened down
- No valve clearance
- Cylinder, piston worn
- Piston ring bad (worn, weak, broken, or sticking)
- Piston ring/groove clearance excessive
- Cylinder head gasket damaged
- Cylinder head warped
- Valve spring broken or weak
- Valve not seating properly (valve bent, worn, or carbon accumulation on the seating surface)

Other:
- Carburetor vacuum piston doesn't slide smoothly

Engine oil viscosity too high
Brake dragging
CDI unit trouble
Front or rear final gear case oil viscosity too high

Poor Running or No Power at High Speed:

Firing incorrect:
Spark plug dirty, broken, or maladjusted
Spark plug cap or Spark plugs lead trouble.
Spark plug cap shorted or not in good contact
Spark plug incorrect
Pickup coil trouble
CDI unit trouble
Ignition coil trouble

Fuel/air mixture incorrect:
Main jet clogged or wrong size
Jet needle or needle jet worn
Main air jet clogged
Bleed holes of air bleed pipe or needle jet clogged
Fuel level too high or too low
Air cleaner clogged, poorly sealed, or missing
Starter plunger stuck open
Water or foreign matter in fuel
Carburetor holder loose
Air cleaner duct loose
Fuel tank air vent obstructed
Fuel tap clogged
Fuel line clogged

Compression low:
Spark plug loose
Cylinder head not sufficiently tightened down
No valve clearance
Cylinder, piston worn
Piston rings bad (worn, weak, broken, or sticking)
Piston ring/groove clearance excessive
Cylinder head gasket damaged
Cylinder head warped
Valve spring broken or weak
Valve not seating properly (valve bent, worn, or carbon accumulation on the seating surface.)

Knocking:
Carbon built up in combustion chamber
Fuel poor quality or incorrect
Spark plug incorrect
CDI unit trouble

Miscellaneous:
Throttle valve won't fully open
Carburetor vacuum piston doesn't slide smoothly
Brake dragging
Overheating
Engine oil level too high
Engine oil viscosity too high
Balancer mechanism malfunctioning
Front or rear final gear case oil viscosity too high.

Overheating:

Firing incorrect:
Spark plug dirty, broken, or maladjusted
Spark plug incorrect
CDI unit trouble

Fuel/air mixture incorrect:
Main jet clogged
Fuel level too low
Carburetor holder loose
Air cleaner poorly sealed, or missing
Air cleaner duct loose
Air cleaner clogged

Compression high:
Carbon built up in combustion chamber

Engine load faulty:
Engine oil level too high
Engine oil viscosity too high
Drive train trouble
Brake dragging

Lubrication inadequate:
Engine oil level too low
Engine oil poor quality or incorrect

Front or rear final gear case overheating:
Insufficient oil
Bevel gears maladjusted

Converter Operation Faulty:

Belt slipping:
Belt dirty, worn, or wetted
Drive or driven pulley sheave dirty or worn
Drive pulley spring broken or weak

Converter engagement speed too low:
Drive pulley spring broken or weak.

Converter engagement speed too high:
Belt drive or worn
Drive or driven pulley sheave dirty worn.
Drive pulley weight doesn't move smoothly.
Drive pulley movable sheave doesn't move smoothly
Drive or driven pulley movable sheave bush worn
Drive pulley weight or roller worn.

Shifting too quickly:
Drive pulley spring weak
Driven pulley spring weak or incorrectly installed (too loose)

Shifting too slowly:
Belt dirty or worn
Drive or driven pulley sheave dirty or worn
D rive pulley weight doesn't move smoothly.
Drive pulley movable sheave doesn't move smoothly
Driven pulley spring incorrectly installed (too tight)
Drive pulley movable sheave doesn't move smoothly

Gear Shifting Faulty:

Doesn't go into gear:
Shift arm bent or seized
Gear stuck on the shaft
Shift tie-rod maladjusted
Shift tie-rod damaged

Jumps out of gear:
Shifter groove worn
Gear dogs worn
Shift block worn
Shift arm positioning bolt spring weak or broken
Shift tie-rod maladjusted

Drive shaft, output shaft, and/or gear worn

Over shifts:

Shift arm positioning bole spring weak or broken
Shift tie-rod maladjusted

Abnormal Engine Noise:

Knocking:

CDI unit trouble
Carbon built up in combustion chamber
Fuel poor quality or incorrect
Spark plug incorrect
Overheating

Piston Slap:

Cylinder/piston clearance excessive
Cylinder, piston holes worn
Connecting rod bent
Piston pin, piston holes worn

Valve noise:

Valve clearance incorrect
Valve spring broken or weak
Camshaft bearing worn
Rocker arm worn

Other noise:

Connecting rod small end clearance excessive
Connecting rod big end clearance excessive
Piston ring worn, broken, or stuck
Piston seizure, damage
Cylinder head gasket leaking
Exhaust pipe leaking at cylinder head connection
Crankshaft runout excessive
Engine mounts loose
Crankshaft bearing worn
Camshaft chain pensioner trouble
Camshaft chain, sprocket, guides worn
Balancer bearing worn
Balancer gear worn or shipped
Loose alternator rotor

Abnormal Drive Train Noise:

Converter noise:

Belt worn
Drive or driven pulley sheave worn
Drive or driven pulley movable sheave bush worn
Drive or driven pulley mount loose.
Drive pulley shoe worn
Drive pulley weight or roller side washer worn
Drive pulley weight or roller worn
Wear guides worn

Transmission noise:

Bearing worn
Transmission gears worn or chipped
Metal chips jammed in gear teeth
Engine oil insufficient or too thin

Front or rear final gear case noise:

Insufficient lubricant
Incorrect oil (Front final gear case)
Bevel gear bearings worn
Bevel gears worn or chipped
Bevel gears maladjusted

Front axle or propeller shaft noise:

Constant velocity universal joint damaged

Abnormal Frame Noise:

Shock absorber noise:

Shock absorber damaged

Disc brake noise:

Pad installed incorrectly
Pad surface glazed
Disc warped
Caliper trouble

Other noise:

Bracket, nut bolt, etc. not properly mounted or tightened.

Exhaust Smokes Excessively:

White smoke:

Piston oil ring worn
Cylinder worn
Valve oil seal damaged
Valve guide worn
Cylinder head gasket damaged
Engine oil level to high

Black Smoke:

Air cleaner clogged
Main jet too large or fallen off
Starter plunger stuck open
Fuel level too high

Brown smoke:

Main jet too small
Fuel level too low
Air cleaner duct loose
Air cleaner poorly sealed or missing

Handing and/or stability Unsatisfactory

Handlebar hard to turn:

Tire air pressure too low
Steering stem bearing damaged
Steering stem bearing lubrication inadequate
Steering stem bent
Damaged steering knuckle joint
Damage tie-rod end

Handlebar shakes or excessively vibrates:

Tire worn
Wheel rim warped
Rear axle runout excessive
Wheel bearing worn
Handlebar clamp loose

Handlebar pulls to one side:

Frame bent
Wheel maladjustment
Suspension arm bent or twisted
Steering stem bent
Front or rear tire air pressure unbalanced
Front shock absorber unbalanced

Shock absorption unsatisfactory:

Too hard:
Tire air pressure too high
Shock absorber maladjusted
Too soft:
Shock absorber oil leaking
Shock absorber spring weak
Tire air pressure too low
Shock absorber maladjusted

Break Doesn't Hold

Front brake:

Air in the brake line
Brake fluid leakage
Brake fluid deteriorated
Primary or secondary cup trouble
Master cylinder scratched inside
Pad over worn or worn unevenly
Oil, grease on pads and disc
Disc worn or warped
Brake overheated

Rear Brake:

Brake not properly adjusted
Linings over worn or worn unevenly
Drum worn unevenly or scored
Oil, grease on lining and drum
Dirt, water between lining and drum
Overheated

Battery Discharged:

Battery faulty (e.g., plates sulfated, shorted through
Sedimentation, electrolyte level too low)
Battery leads making poor contact
Load excessive (e.g., bulb of excessive wattage)
Ignition switch trouble
Regulator/ rectifier trouble
Alternator trouble
Wring faulty

Battery Over charged:

Regulator/rectifier trouble
Battery trouble